FCC ID LABEL:
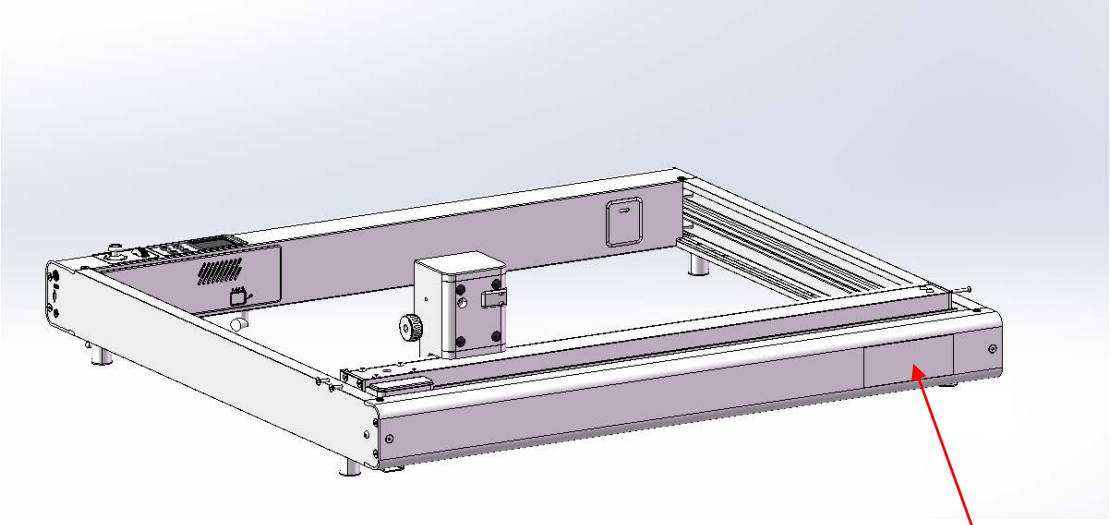
Label Location: