intertek
Total Quality. Assured.

Brillian Network & Automation Integrated System Co.,Ltd

TEST REPORT

Model:
BR-E-Rack-0001

REPORT NUMBER
220700426THC-001

ISSUE DATE
Sep. 02, 2022

PAGES
17

DOCUMENT CONTROL NUMBER
GFT-OP-10h (28-Nov-2018)
© 2020 Intertek

Radio Spectrum
TEST REPORT

Applicant:	**Brillian Network & Automation Integrated System Co., Ltd** **No. 41, Keyi St., Zhunan Township, Miaoli County 350402, Taiwan**
Product:	**Electronic shelf**
Model No.:	**BR-E-Rack-0001**
FCC ID:	**2A583-ERACK0001**
Test Method/ Standard:	**47 CFR FCC Part 15.209**
Test By:	**Intertek Testing Services Taiwan Ltd.,** **Hsinchu Laboratory** **No. 11, Lane 275, Ko-Nan 1 Street, Chia-Tung Li,** **Shiang-Shan District, Hsinchu City, Taiwan**

Testing Laboratory
0597

Rich Nien
Engineer

Zero Chen
Reviewer

This report is for the exclusive use of Intertek's Client and is provided pursuant to the agreement between Intertek and its Client. Intertek's responsibility and liability are limited to the terms and conditions of the agreement. Intertek assumes no liability to any party, other than to the Client in accordance with the agreement, for any loss, expense or damage occasioned by the use of this report. Only the Client is authorized to permit copying or distribution of this report and then only in its entirety. Any use of the Intertek name or one of its marks for the sale or advertisement of the tested material, product or service must first be approved in writing by Intertek. The observations and test results in this report are relevant only to the sample tested. This report by itself does not imply that the material, product, or service is or has ever been under an Intertek certification program.

Revision History

Report No.	Issue Date	Revision Summary
220700426THC-001	Sep. 02, 2022	Original report

Table of Contents

Summary of Test Data 4

1. General Information 5
   1.1 Identification of the EUT 5
   1.2 Antenna description 5

2. Test specifications 6
   2.1 Test standard 6
   2.2 Operation mode 6
   2.3 Peripherals equipment 6

3. Radiated emission test FCC 15.209 7
   3.1 Operating environment 7
   3.2 Test setup & procedure 7
   3.3 Radiated emission limit 9
   3.3.1 General radiated emission limit 9
   3.4 Radiated emission test data FCC 15.209 9
   3.4.1 Measurement results: Fundamental emission 9
   3.4.2 Measurement results: Frequencies equal to or less than 1 GHz 10

4. Conducted emission FCC 15.207 12
   4.1 Measuring instrument setting 12
   4.2 Test Procedure 12
   4.3 Test Diagram 13
   4.4 Limit 13
   4.5 Test Results 14

Appendix A: Test equipment list 16

Appendix B: Measurement Uncertainty 17

Summary of Test Data

Test Requirement	Applicable Rule	Result
Radiated Emission test	15.209	Pass
Conducted Emission test	15.207	Pass
Antenna Requirement	15.203	Pass

Note: Please note that the test results with statement of conformity, the decision rules which are based on: Safety Testing: the specification, standard or IEC Guide 115.
Other Testing: the specification, standard and not taking into account the measurement uncertainty.

1. General Information

1.1 Identification of the EUT

Product:	Electronic shelf
Model No.:	BR-E-Rack-0001
Operating Frequency:	134 kHz
Rated Power:	120Vac, 60Hz
Power Cord:	3C × 18AWG × 5m unshielded cable
Sample receiving date:	2022/07/27
Sample condition:	Workable
Test Date(s):	2022/7/28 ~ 2022/08/10

1.2 Antenna description

Antenna Type : Dipole antenna
Connector Type : PH

2. Test specifications

2.1 Test standard

The EUT was performed according to the requirement in FCC Part 15 Subpart C Section 15.209.

2.2 Operation mode

The EUT transmit 134kHz continuously while we power on the EUT.

2.3 Peripherals equipment

Peripherals	Brand	Model No.	Serial No.	Description of Data Cable
Notebook PC	acer	ES1-131	NXG17TA00261405AC87600	1. RJ-45 STP Cat.5 6m 2. RS232 Cable 3m

3. Radiated emission test FCC 15.209

3.1 Operating environment

Temperature:	28	℃
Relative Humidity:	55	%

3.2 Test setup & procedure

Radiated emission from 9kHz to 30MHz uses Loop Antenna:

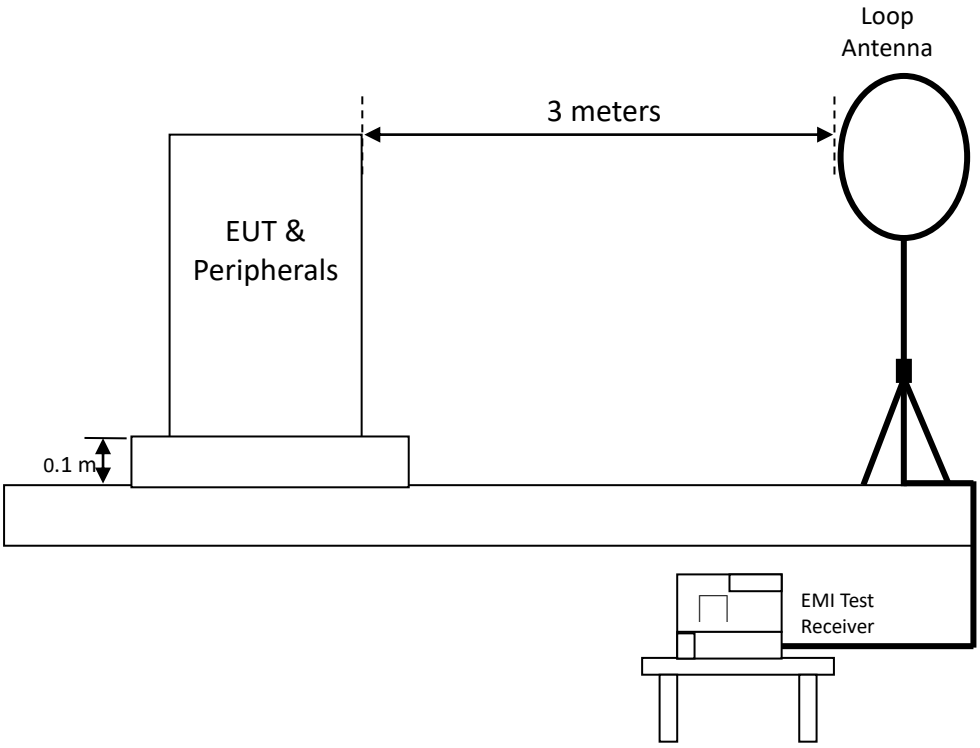

Radiated emission below 1GHz using Bilog Antenna

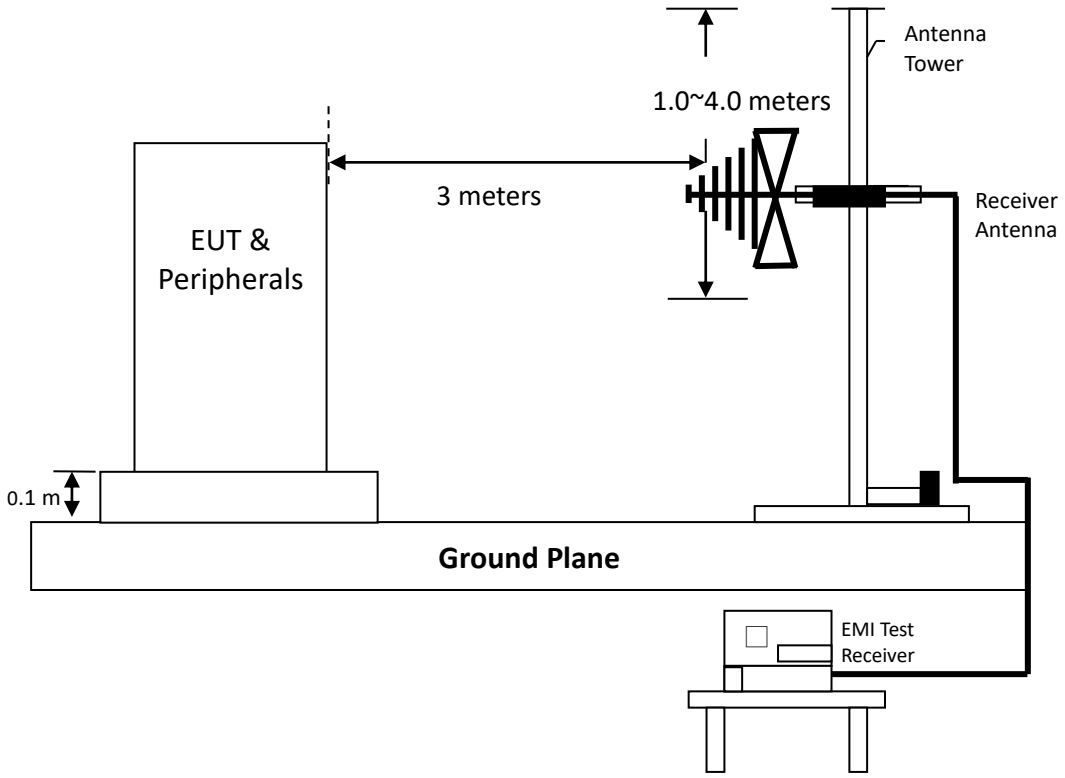

Radiated emissions were invested cover the frequency range from 30MHz to 1000MHz using a receiver RBW of 120kHz record QP reading, and the frequency over 1GHz using a spectrum analyzer RBW of 1MHz and 10Hz VBW record Average reading. (15.209 paragraph), the Peak reading (1 MHz RBW/ 3 MHz VBW) recorded also on the report.
The EUT for testing is arranged on a turntable. If some peripherals apply to the EUT, the peripherals will be connected to EUT and the whole system. During the test, all cables were arranged to produce worst-case emissions. The signal is maximized through rotation. The height of antenna and polarization is changing constantly for exploring for maximum signal level. The height of antenna can be up to 4 meters and down to 1 meter.

The measurement for radiated emission will be done at the distance of three meters unless the signal level is too low to measure at that distance. In the case of the reading under noise floor, a pre-amplifier is used and/or the test is conducted at a closer distance. And then all readings are extrapolated back to the equivalent three meter reading using inverse scaling with distance.

3.3 Radiated emission limit

3.3.1 General radiated emission limit

The spurious Emission shall test through the 10th harmonic. In addition, radiated emissions which fall in the restricted bands, as defined in §15.205(a), must also comply with the radiated emission limits specified in §15.209(a).

Frequency (MHz)	Field Strength (µV/m)	Field Strength (dBµV/m)	Measurement Distance
0.009-0.490	2400/F(KHz)	20 log (uV/m)	300
0.490-1.705	2400/F(KHz)	20 log (uV/m)	30
1.705-30	30	29.5	30
30-88	100	40	3
88-216	150	43.5	3
216-960	200	46	3
Above 960	500	54	3

Remark:
1. In the above table, the tighter limit applies at the band edges.
2. Distance refers to the distance in meters between the measuring instrument antenna and the closed point of any part of the device or system

3.4 Radiated emission test data FCC 15.209

3.4.1 Measurement results: Fundamental emission

Antenna Polarization	Frequency (MHz)	Spectrum Analyzer Detector	Correction Factor (dB/m)	Reading (dBµV)	Corrected Reading (dBµV/m)	Limit @ 3 m (dBµV/m)	Margin (dB)
Perpendicular	0.134	AV	18.06	82.69	100.75	105.21	-4.46
Parallel	0.134	AV	18.06	78.63	96.69	105.21	-8.52
Ground-parallel	0.134	AV	18.06	68.01	86.07	105.21	-19.14

3.4.2 Measurement results: Frequencies equal to or less than 1 GHz

9kHz - 30MHz

Antenna Polarization	Frequency (MHz)	Spectrum Analyzer Detector	Correction Factor (dB/m)	Reading (dBµV)	Corrected Reading (dBµV/m)	Limit @ 3 m (dBµV/m)	Margin (dB)
Perpendicular	0.129	AV	18.04	82.91	100.95	105.56	-4.61
Perpendicular	0.159	AV	18.14	47.13	65.27	103.63	-38.36
Perpendicular	0.249	AV	18.45	35.39	53.84	99.69	-45.85
Perpendicular	0.399	AV	18.71	44.48	63.19	95.59	-32.40
Perpendicular	0.489	AV	18.79	32.76	51.55	93.82	-42.27
Perpendicular	0.669	QP	18.90	36.02	54.92	71.18	-16.26

#DIV/0!

Antenna Polarization	Frequency (MHz)	Spectrum Analyzer Detector	Correction Factor (dB/m)	Reading (dBµV)	Corrected Reading (dBµV/m)	Limit @ 3 m (dBµV/m)	Margin (dB)
Parallel	0.129	AV	18.04	79.46	97.50	105.56	-8.06
Parallel	0.249	AV	18.45	34.69	53.14	99.69	-46.55
Parallel	0.399	AV	18.71	42.34	61.05	95.59	-34.54
Parallel	0.489	AV	18.79	26.90	45.69	93.82	-48.13
Parallel	0.669	QP	18.90	33.35	52.25	71.18	-18.93
Parallel	0.939	QP	19.07	25.81	44.88	68.19	-23.31

Antenna Polarization	Frequency (MHz)	Spectrum Analyzer Detector	Correction Factor (dB/m)	Reading (dBµV)	Corrected Reading (dBµV/m)	Limit @ 3 m (dBµV/m)	Margin (dB)
Ground-parallel	0.129	AV	18.04	67.56	85.60	105.56	-19.96
Ground-parallel	0.159	AV	18.14	30.78	48.92	103.63	-54.71
Ground-parallel	0.399	AV	18.71	29.22	47.93	95.59	-47.66
Ground-parallel	0.489	AV	18.79	21.84	40.63	93.82	-53.19
Ground-parallel	0.579	QP	18.85	20.83	39.68	72.38	-32.70
Ground-parallel	0.669	QP	18.90	20.18	39.08	71.18	-32.10

30MHz - 1GHz

Antenna Polarity (H/V)	Frequency (MHz)	Spectrum Analyzer Detector	Correction Factor (dB/m)	Reading (dBµV)	Corrected Reading (dBµV/m)	Limit @ 3 m (dBµV/m)	Margin (dB)
Vertical	43.58	QP	20.22	18.15	38.37	40.00	-1.63
Vertical	55.22	QP	20.65	15.53	36.18	40.00	-3.82
Vertical	76.56	QP	17.04	20.00	37.04	40.00	-2.96
Vertical	101.78	QP	16.14	23.34	39.48	43.50	-4.02
Vertical	198.78	QP	17.61	23.30	40.91	43.50	-2.59
Vertical	221.09	QP	17.97	21.93	39.90	46.00	-6.10

Antenna Polarity (H/V)	Frequency (MHz)	Spectrum Analyzer Detector	Correction Factor (dB/m)	Reading (dBµV)	Corrected Reading (dBµV/m)	Limit @ 3 m (dBµV/m)	Margin (dB)
Horizontal	76.56	QP	17.04	18.26	35.30	40.00	-4.70
Horizontal	88.20	QP	14.89	22.41	37.30	43.50	-6.20
Horizontal	100.81	QP	15.93	21.25	37.18	43.50	-6.32
Horizontal	198.78	QP	17.61	20.52	38.13	43.50	-5.37
Horizontal	221.09	QP	17.97	14.85	32.82	46.00	-13.18
Horizontal	243.40	QP	19.67	14.63	34.30	46.00	-11.70

Remark: Corr. Factor = Antenna Factor + Cable Loss

4. Conducted emission FCC 15.207

4.1 Measuring instrument setting

Receiver Function	Setting
Detector	QP
Start frequency	0.15MHz
Stop frequency	30MHz
IF bandwidth	9 kHz
Attenuation	10dB

4.2 Test Procedure

Step 1	Configure the EUT according to ANSI C63.10:2013. The EUT or host of EHT has to be placed 0.4 meter far from the conducting wall of the shielding room and at least 80 centimeters from any other grounded conducting surface.
Step 2	Connect EUT or host of EUT to the power mains through a line impedance stabilization network.
Step 3	All the companion devices are connected to the other LISN. The LISN should provide 50Uh/50ohms coupling impedance.
Step 4	The frequency range from 150 kHz to 30MHz was searched.
Step 5	Set the test-receiver system to peak detector and specified bandwidth with maximum hold mode.
Step 6	The measurement has to be done between each power line and ground at the power terminal.

4.3 Test Diagram

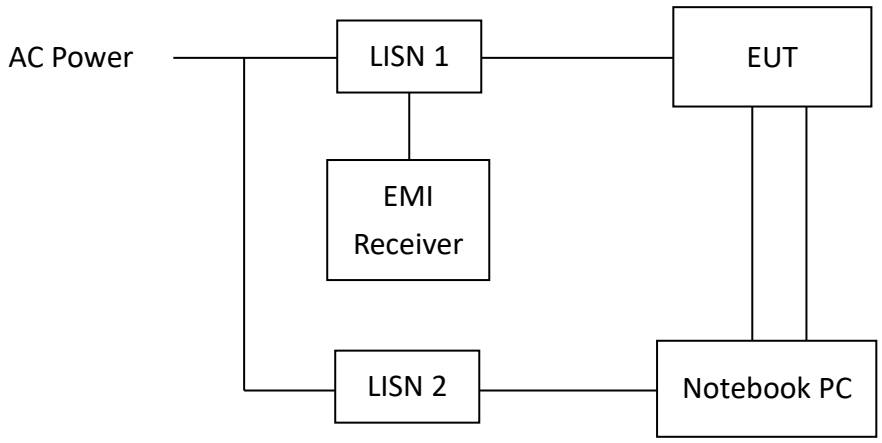

4.4 Limit

Frequency (MHz)	Conducted Limit (dBuV)	
	Q.P.	Ave.
0.15~0.50	66 – 56	56 – 46
0.50~5.00	56	46
5.00~30.0	60	50

4.5 Test Results

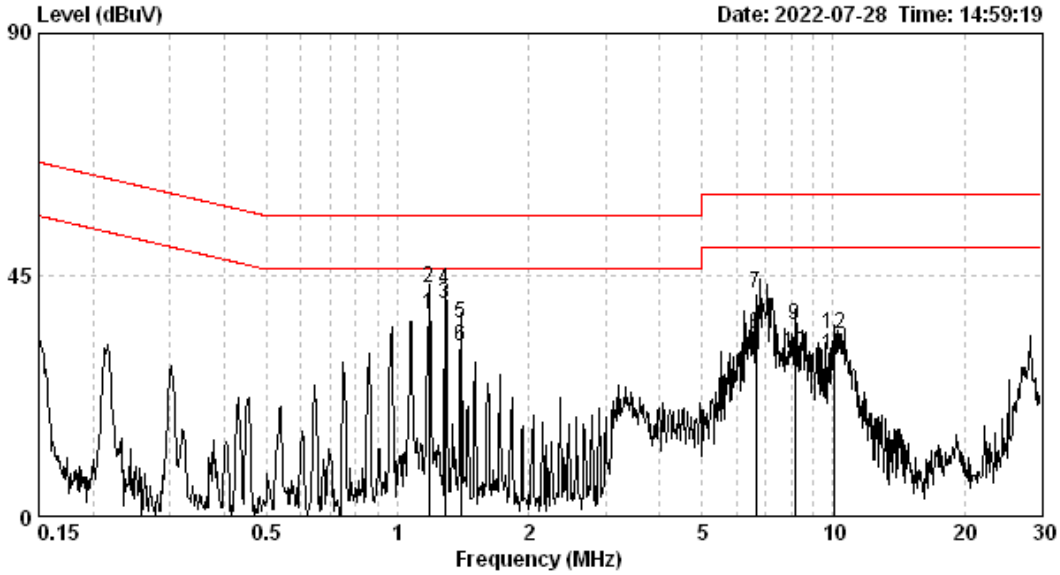

Test voltage :AC 120V/60Hz
Temp./ R.H. :24°C / 54%RH
Atmospheric pressure :1002 hPa

Phase	Frequency (MHz)	Corr. Factor (dB)	Reading QP (dBuV)	Level QP (dBuV)	Limit QP (dBuV)	Reading AV (dBuV)	Level AV (dBuV)	Limit AV (dBuV)	Margin (dB) QP	Margin (dB) AV
LINE	1.180	0.17	42.43	42.60	56.00	37.49	37.66	46.00	-13.40	-8.34
LINE	1.287	0.17	41.91	42.07	56.00	39.41	39.58	46.00	-13.93	-6.42
LINE	1.396	0.17	35.78	35.94	56.00	31.34	31.50	46.00	-20.06	-14.50
LINE	6.652	0.21	41.41	41.62	60.00	33.58	33.80	50.00	-18.38	-16.20
LINE	8.148	0.23	35.44	35.67	60.00	30.11	30.34	50.00	-24.33	-19.66
LINE	10.076	0.24	33.75	33.99	60.00	29.87	30.11	50.00	-26.01	-19.89

Remark:
1. Corr. Factor (dB) = AMN Factor (dB) + Cable Loss (dB)
2. Level (dBuV) = Corr. Factor (dB) + Reading (dBuV)
3. Margin (dB) = Level (dBuV) – Limit (dBuV)

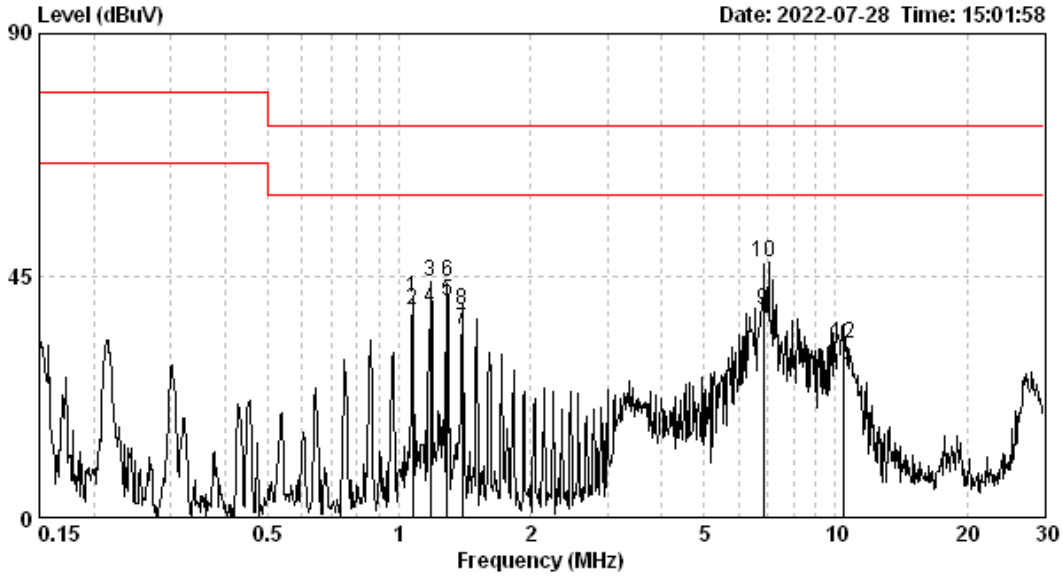

Test voltage :AC 120V/60Hz
Temp./ R.H. :24°C / 54%RH
Atmospheric pressure :1002 hPa

Phase	Frequency (MHz)	Corr. Factor (dB)	Reading QP (dBuV)	Level QP (dBuV)	Limit QP (dBuV)	Reading AV (dBuV)	Level AV (dBuV)	Limit AV (dBuV)	Margin (dB) QP	Margin (dB) AV
NEUTRAL	1.077	0.18	40.72	40.90	73.00	38.45	38.63	60.00	-32.10	-21.37
NEUTRAL	1.180	0.18	43.73	43.90	73.00	38.70	38.88	60.00	-29.10	-21.12
NEUTRAL	1.287	0.18	43.71	43.88	73.00	39.88	40.06	60.00	-29.12	-19.94
NEUTRAL	1.396	0.18	38.40	38.57	73.00	34.85	35.02	60.00	-34.43	-24.98
NEUTRAL	6.847	0.34	47.02	47.37	73.00	38.38	38.72	60.00	-25.63	-21.28
NEUTRAL	10.397	0.43	32.03	32.46	73.00	25.87	26.30	60.00	-40.54	-33.70

Remark:
1. Corr. Factor (dB) = AMN Factor (dB) + Cable Loss (dB)
2. Level (dBuV) = Corr. Factor (dB) + Reading (dBuV)
3. Margin (dB) = Level (dBuV) – Limit (dBuV)

Appendix A: Test equipment list

Test Equipment/ Test site	Brand	Model No.	Serial No.	Calibration Date	Next Calibration Date
EMI Test Receiver	Rohde & Schwarz	ESR7	101822	2021/08/16	2022/08/15
Active Loop Antenna	SCHWARZBECK MESS-ELEKTRONIC	FMZB1519	1519-067	2022/04/13	2023/04/12
Broadband Antenna	SHWARZBECK	VULB 9168	9168-172	2022/01/20	2023/01/19
966-2(A) Cable	SUHNER	SMA / EX 100	N/A	2022/03/04	2023/03/03
966-2(B) Cable	SUHNER	SUCOFLEX 104P	CB0005	2022/03/04	2023/03/03
966-2_3m Semi-Anechoic Chamber	966_2	CEM-966_2	N/A	2022/01/14	2023/01/13
Test software	Audix	e3	V9	NCR	NCR
LISN	Schaffner	MN2050D	1586	2021/09/22	2022/09/21
Cable	SUHNER	SUCOFLEX 106	27221 /6	2022/01/10	2023/01/09
EMI Test Receiver	R&S	ESR-7	101232	2022/02/07	2023/02/06
Test software	Audix	e3	V4.20040112L	NCR	NCR

Note: No Calibration Required (NCR).

Appendix B: Measurement Uncertainty

This uncertainty represents an expanded uncertainty expressed at approximately the 95 % confidence level using a coverage factor of *k*=2.

Item	Uncertainty
Fundamental emission	4.32 dB
Radiated disturbances from 9kHz~30MHz in a semi-anechoic chamber at a distance of 3m	3.70 dB
Vertically polarized radiated disturbances from 30MHz~1GHz in a semi-anechoic chamber at a distance of 3m	5.16 dB
Horizontally polarized radiated disturbances from 30MHz~1GHz in a semi-anechoic chamber at a distance of 3m	5.02 dB
AC Power Line Conducted Emission	3.08 dB