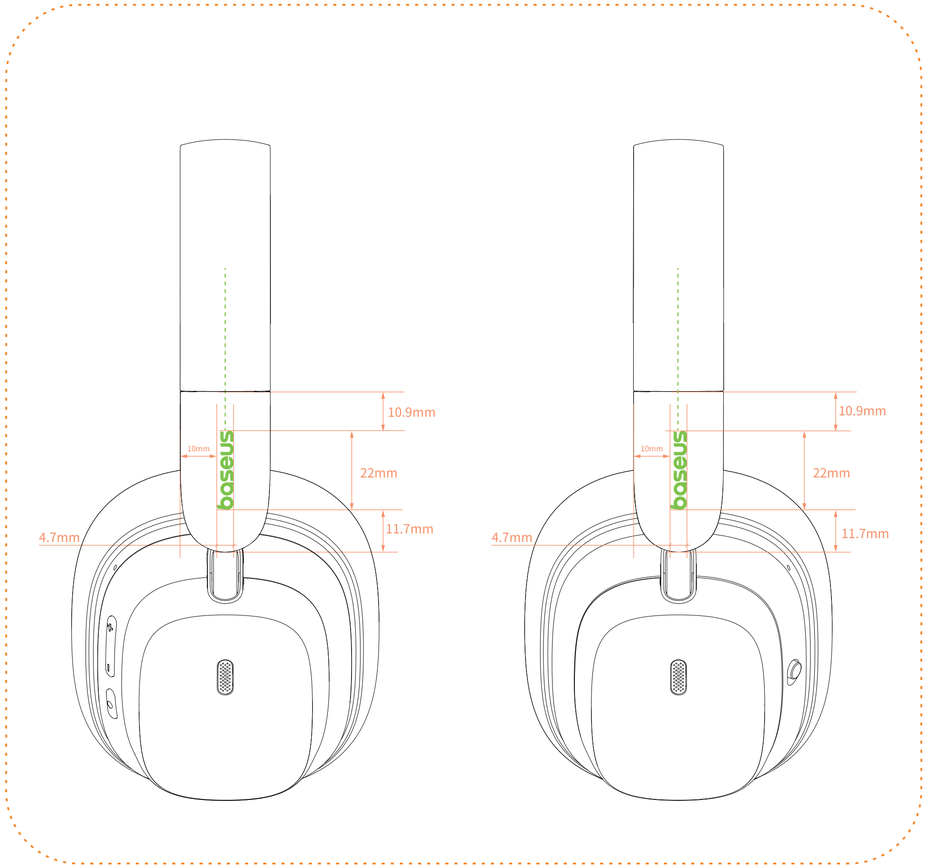
10.9mm
22mm
11.7mm
4.7mm
10mm
baseus
10.9mm
22mm
11.7mm
4.7mm
10mm
baseus

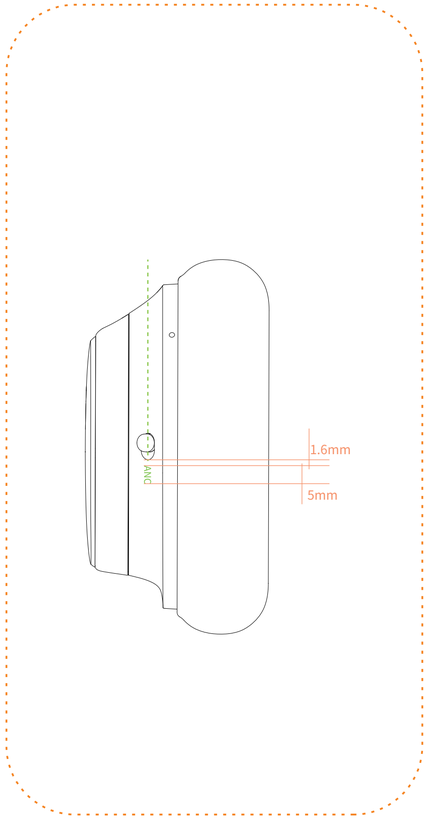
ANC
1.6mm
5mm

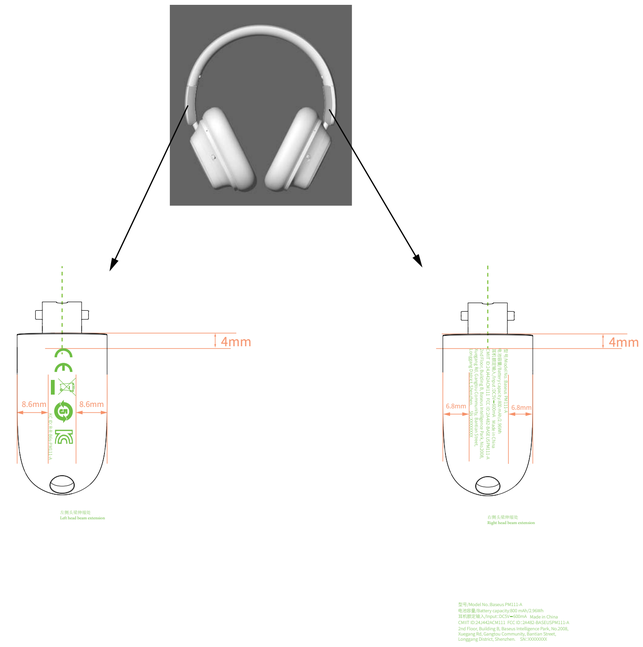
4mm
8.6mm
8.6mm
左侧头梁伸缩量
Left head beam extension
4mm
6.8mm
6.8mm
右侧头梁伸缩量
Right head beam extension
型号/Model No.:Baseus P81115-A
生产日期/Date of Manufacture:2024/2 Week
技术参数/Rated Input:DC5V⎓500mA ; Made in China
CNYT ID:241442ACM11; FCC ID:2AB8D-BASEUSP81115-A
2nd Floor, Building B, Baseus Intelligence Park, No.2009,
Xuegang Rd, Longhua Community, Bantian Street,
Longgang District, Shenzhen. SN:XXXXXXX

baseus
baseus

ANC