标签粘贴位置图

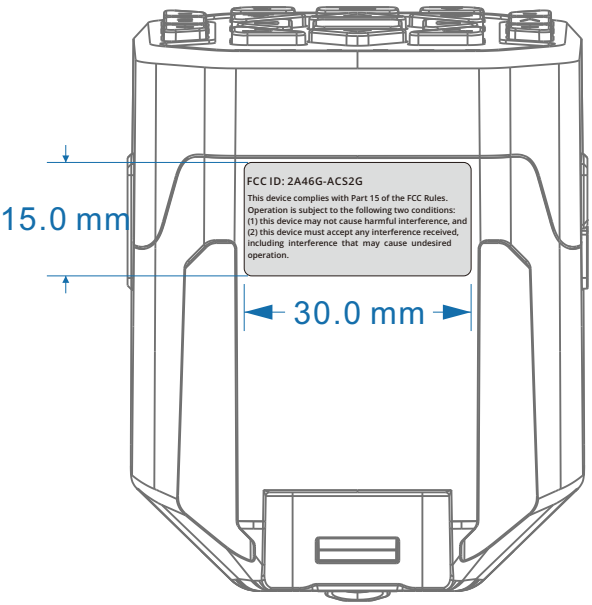
15.0 mm
30.0 mm
FCC ID: 2A46G-ACS2G
This device complies with Part 15 of the FCC Rules.
Operation is subject to the following two conditions:
(1) this device may not cause harmful interference, and
(2) this device must accept any interference received,
including interference that may cause undesired
operation.

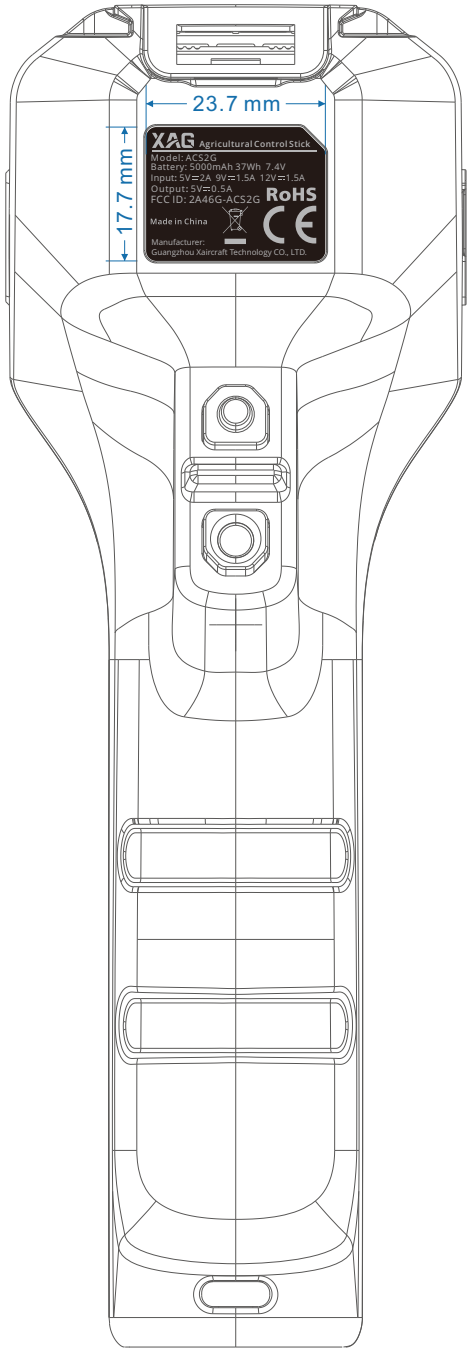
23.7 mm
17.7 mm
XAG Agricultural Control Stick
Model: ACS2G
Battery: 5000mAh 37Wh 7.4V
Input: 5V⎓2A 9V⎓1.5A 12V⎓1.5A
Output: 5V⎓0.5A
FCC ID: 2A46G-ACS2G
RoHS
Made in China
Manufacturer:
Guangzhou Xaircraft Technology CO., LTD.