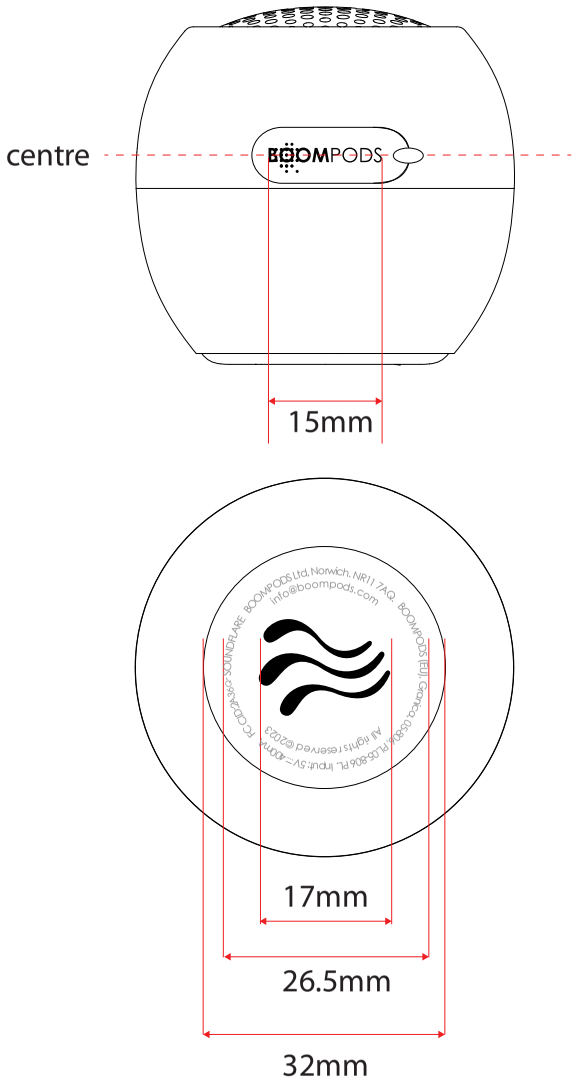
centre
BOOMPODS
15mm
BOOMPODS Ltd, Norwich, NR11 7AQ. info@boompods.com
BOOMPODS (EU) Gebruikscodes 05890/LUS806FL. Input:5V⎓400mA
All rights reserved ©2023
FC-CD24-5-6-7-SOUNDPLARE
17mm
26.5mm
32mm