IRIDIUM Antenna, P/N: S1.5IR16RR-P-XS-X

1.5" Square, Back Mount Configurations

ISO 9001:2008/FAA Approved Facility

Antenna Mounts: http://www.antcom.com/documents/catalogs/PeripheralAntennaProducts2.pdf

ANTCOM CORPORATION . 367 Van Ness Way, Suite 602 . Torrance, CA 90501, USA . Tel: (310) 782-1076 . Fax: (310) 782-1086 . E-mail: antennas@antcom.com . http://www.antcom.com

NOTICE OF PROPRIETARY RIGHTS
THIS DOCUMENT CONTAINS CONFIDENTIAL TECHNICAL DATA INCLUDING TRADE SECRETS PROPRIETARY TO ANTCOM CORP. DISCLOSURE OF THIS DATA TO YOU IS EXPRESSLY CONDITIONED UPON YOUR ASSENT THAT ITS USE IS LIMITED TO USE WITHIN YOUR COMPANY ONLY (AND DOES NOT INCLUDE MANUFACTURE OR PROCESSING USES). ANY OTHER USE IS STRICTLY PROHIBITED WITHOUT PRIOR WRITTEN CONSENT OF ANTCOM CORP.

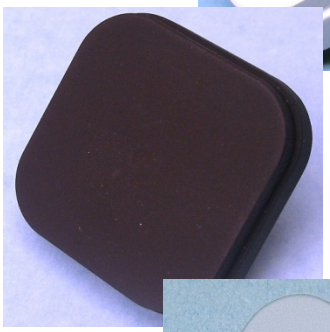

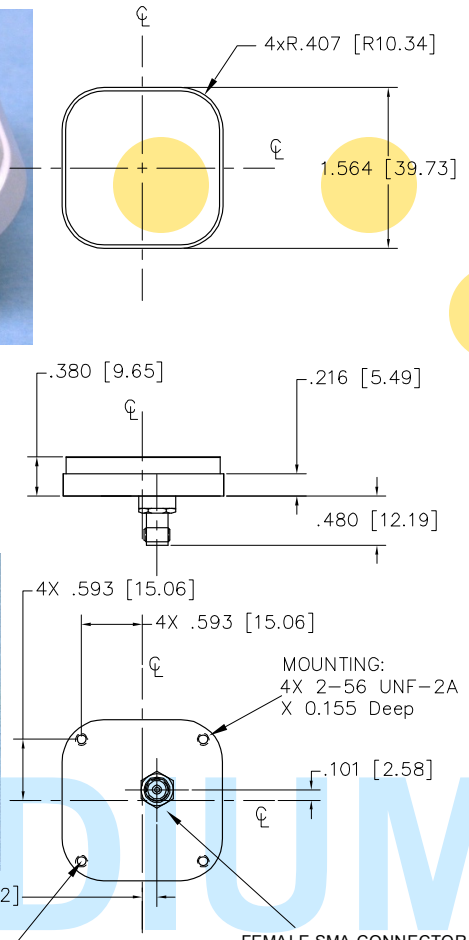

SIZE	FREQ.BAND	POLARIZATION:	LNA:	FILTER
1: 2" SQ.	1625: Tx/Rx	LL: TX: LHCP, RX: LHCP	A1: WITH +23 dB LNA	
1.5: 1.5" SQ.	25: 2493 MHz	LR: TX: LHCP, RX: RHCP	A2: WITH +43 dB LNA	
2: 2.6" DIA.	16: 1616 MHz	RL: TX: RHCP, RX: LHCP	P: WITHOUT LNA	
3: 3.5" DIA.		RR: TX: RHCP, RX: RHCP		
4: MINI ARINC				

P/N: S1.5IR16RR-P-XS-X

CABLE SLENGTH	CONNECTOR	COLOR
X: NO CABLE	S: SMA; P: PINS	-1: GLOSS WHITE #17925 PER FED-STD-595B
M: WITH MAG. MOUNT	M: MCX; MM: MMCX	-2: LUSTERLESS GRAY #36320 PER FED-STD-595B
#: CABLE LENGTH (IN)	N, NB: N, N-Bulkhead	-3: OLIVE DRAB GREEN #34031 PER FED-STD-595B
R: RIGHT ANGLE CON.	T, TB: TNC, TNC-Bulkhead	-4: LUSTERLESS BLACK #37038 PER FED-STD-595B

2. MOUNTING SCREWS ARE SUPPLIED BY ANTCOM CORPORATION
1. DIMENSIONS IN BRACKETS ARE IN MILLIMETERS [mm]

NOTES: UNLESS OTHERWISE SPECIFIED:

REVISIONS

ZONE	REV	DESCRIPTION	DATE	APPROVED

SPECIFICATIONS

ELECTRICAL:

FREQUENCY:	(1610.0 - 1626.5) MHz		SEE PART NO. BELOW
RADIATION PATTERN:	HEMISPHERICAL		
POLARIZATION:	RHCP		
VSWR:	< 1.5:1		
GAIN (dB):	4 ft G.P.	2.6 in G.P.	
@ 90° (Zenith):	+4.9	+4.4	
@ 10° Elevation (Ave):	-1.0	-2.6	
@ 20° Elevation (Ave):	+1.5	-1.0	
@ 30° Elevation (Ave):	+2.4	+0.4	
@ 45° Elevation (Ave):	+3.3	+2.5	
@ 70° Elevation (Ave):	+4.7	+4.0	
BEAM WIDTH (3dB):	129 °	+106 °	
AXIAL RATIO @ Zenith:	2.0 dB		
IMPEDANCE:	50 Ohms		
POWER HANDLING:	200 Watt		
DC GROUNDING	YES (LIGHTNING PROTECTION)		

MECHANICAL:

SIZE:	1.57in Square HEIGHT= 0.38 in. [9.7mm]
WEIGHT:	1.5 oz. (42.5 g)
FINISH:	SKYDROL RESISTANT POLYURETHANE ENAMEL BASE IRIDITE PER MIL-C-5441
COLOR:	GLOSS WHITE #17925 PER FED-STD-595B LUSTERLESS GRAY #36320 PER FED-STD-595B OLIVE DRAB GREEN #34031 PER FED-STD-595B LUSTERLESS BLACK #37038 PER FED-STD-595B
MATERIAL:	6061-T6 ALUMINUM ALLOY BASE COMPOSITE RADOME, IMPACT, ABRASION, UV, SOLVENT, AND SKYDROL RESISTANCE, FIRE RETARDANT
CONNECTOR:	FEMALE SMA CONNECTOR (TNC, N , OTHER CONNECTOR, OR CABLE IS OPTIONAL)

ENVIRONMENTAL:

TEMPERATURE:	-67 °F TO +185 °F [-55 °C TO +85 °C]
ALTITUDE:	70,000 ft.
VIBRATION:	> 30 G's
LEAKAGE:	HERMETICALLY SEAL

FEDERAL & MILITARY SPECIFICATIONS:

DESIGN TO: FAA TSO-C144, DO-160D, D0-228, MIL-C-5541, MIL-E-5400, MIL-I-45208A, MIL-STD-810, AND SAE J1455

QUANTITY REQD -2	-1	DESCRIPTION	PART NO	SPECIFICATION	MATERIAL	FINISH	ITEM NO
	–			–	–	–	5
	–	ADHESIVE GASKET	12345G-3M-1.2G	–	–	–	3
				–			
				–	–	–	1

PARTS LIST

UNLESS OTHERWISE SPECIFIED DIMENSIONS ARE IN INCHES TOLERANCES ARE: FRACTIONS ± 1/64 DECIMALS .XX ± .015 .XXX ± .005 ANGLES ± 1°
TOLERANCE SYM PER ANSI Y14.5
REMOVE ALL BURRS. BREAK EXTERNAL EDGES .005 TO .015 FILLETS R .005 TO R .030 SCREW THREADS PER MIL-S-8879 DIA'S ON A COMMON ℄ ⌭ .005
MACHINED SURFACES 125
DO NOT SCALE DRAWING

DRAWN
CHECKED
ENGINEER
APPROVED S. HUYNH Aug-27-03
CAD FILE NO

ANTCOM CORP. TORRANCE, CALIFORNIA

1.5" SQ. IRIDIUM ANTENNA

SIZE D | CAGE NO 3CVE1 | DRAWING NO S1.5IR16RR-P-XS-X | REV –
SCALE 1/1 | SHEET 1 OF 1

NMO Connector Option is Now Available for Some Antennas