REVISIONS			
REV.	DESCRIPTION	DATE	APPROVED
A	ORIGINAL RELEASE	05/13/21	ELE/JTB

ITEM NO.	PART NUMBER	QTY.
1	FHKA017-01	1
2	GA0003 TEST RANGE SOURCE POL DRIVE	1
3	GA0011 (O-RING .9375ID X 1.0625OD X .070 EPDM)	1
4	GA0027 (O-RING 1.989ID X 2.129OD X .070 EPDM)	1
5	GA0033 (WR28 Chromeric Gasket - 4 hole flat)	2
6	GA0038	2
7	GA0075 (WR42 Chromeric Gasket - 4 hole flat)	1
8	HW#1005	6
9	HW#10FW04	6
10	HW#10LW	6
11	HW#4031	4
12	HW#4045	12
13	HW#4051	3
14	HW#4LW01	16
15	HW#6001	8
16	HW#6FW	8
17	HW#6LW	8
18	HW#8012	8
19	RF00157 - Spacetime Engineering - Extended Ka OMT Diplexer 4 Port - 10015-008	1
20	RF42-0006-01	1
21	TR01-0160-01	1
22	VI00164	1

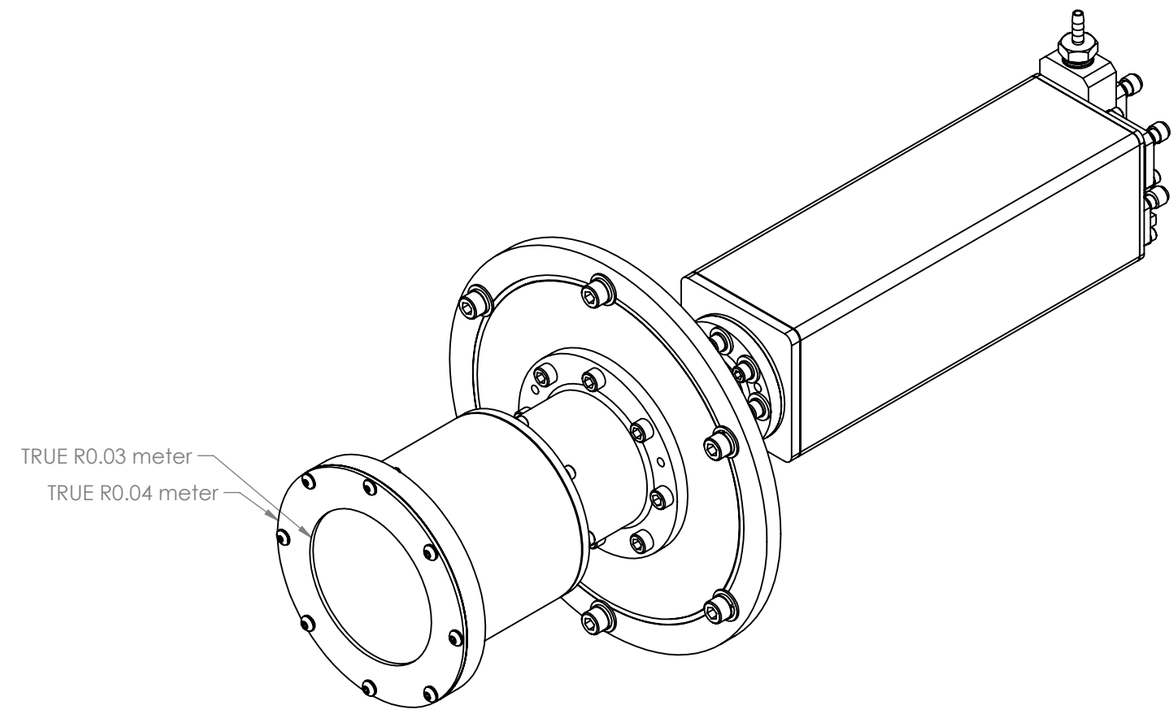

TR01-0167-01

3.28 #EA
- EST. WEIGHT -

! DO NOT SCALE DRAWING !

UNLESS OTHERWISE SPECIFIED I INTERPRET DIMENSIONING & TOLERANCING PER ASME Y14.5M-1994. DIMENSIONS ARE IN INCHES. DIMENSIONS SHOWN IN ( ) ARE FOR REFERENCE ONLY. TOLERANCES ARE:

FRACTIONS:	DECIMALS:	ANGLES ±
DETAILS ± 1/16	.XX ± .03	0.5 DEG
ASSY'S ± 1/8	.XXX ± .005	

DRILL HOLE TOLERANCE (DRILL)
.013 thru .125 = +.005/-.001
.126 thru .250 = +.007/-.003
.251 thru .750 = +.008/-.003
.751 thru 1.000 = +.009/-.004
1.001 thru 2.000 = +.012/-.005

CLEARANCE HOLE TOLERANCE (CHT)
+.031/-.000

REFERENCE SEPARATE BOM FOR SPECIFIC INFO

MATERIAL
PER PARTS LIST/BOM

FINISH (IF APPLICABLE)

EXPORT CONTROL WARNING - Do not disclose this document or its contents to non-U.S. persons, or transmit this document or its contents outside the United States without the written permission of Sat-Lite Technologies and required U.S. Government approvals.

UNLESS OTHERWISE SPECIFIED! PART TO BE FREE OF BURRS & SHARP EDGES. COMMERCIAL TOLERANCES TO STOCK SIZES APPLY.

APPROVALS	DATE
DRAWN E.ELLIS	05/13/21
CHECKED -	-
DESIGNER	
MANUFACTURING -	-
PROJECT -	-
PRODUCT MGR -	-
DESIGN -	-

CONFIDENTIAL AND PROPRIETARY

SAT-LITE technologies
1969 WILLOW LAKE DRIVE
WHITE OAK, TX 75693 USA
903-295-3400

TITLE:
ASSY-SOURCE FEED-KA BAND
TX/RX WR28/42
TEST RANG CONFIG

CODE ID. NO.	SIZE	DWG NO.	REV
4LP18	B	TR01-0167	A

SCALE: 1:2 | CONTRACT NO. TR01 | SHEET 1 OF 1

b1