Isometric View 1

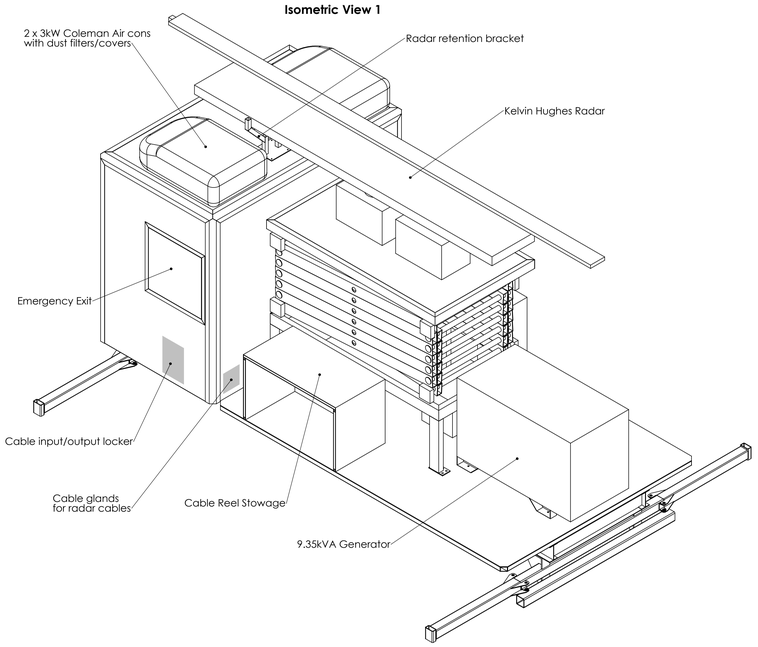

Isometric View 2

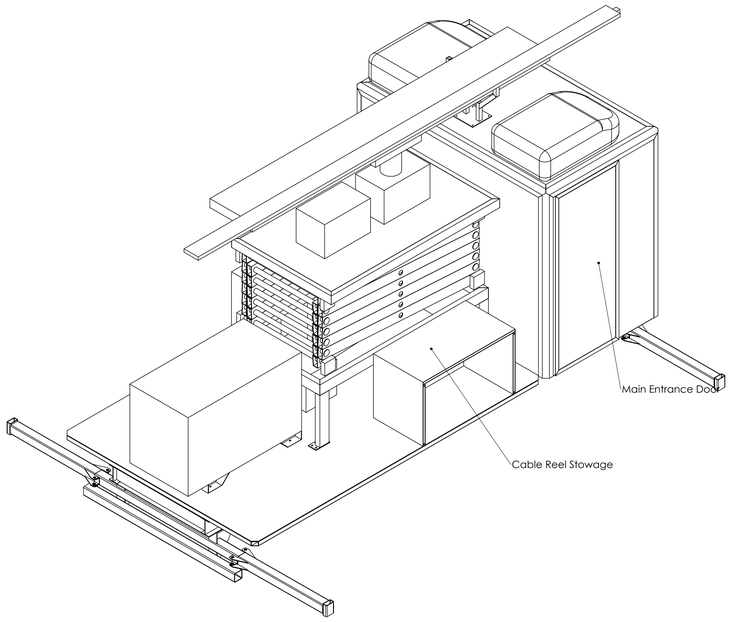

Side View Open

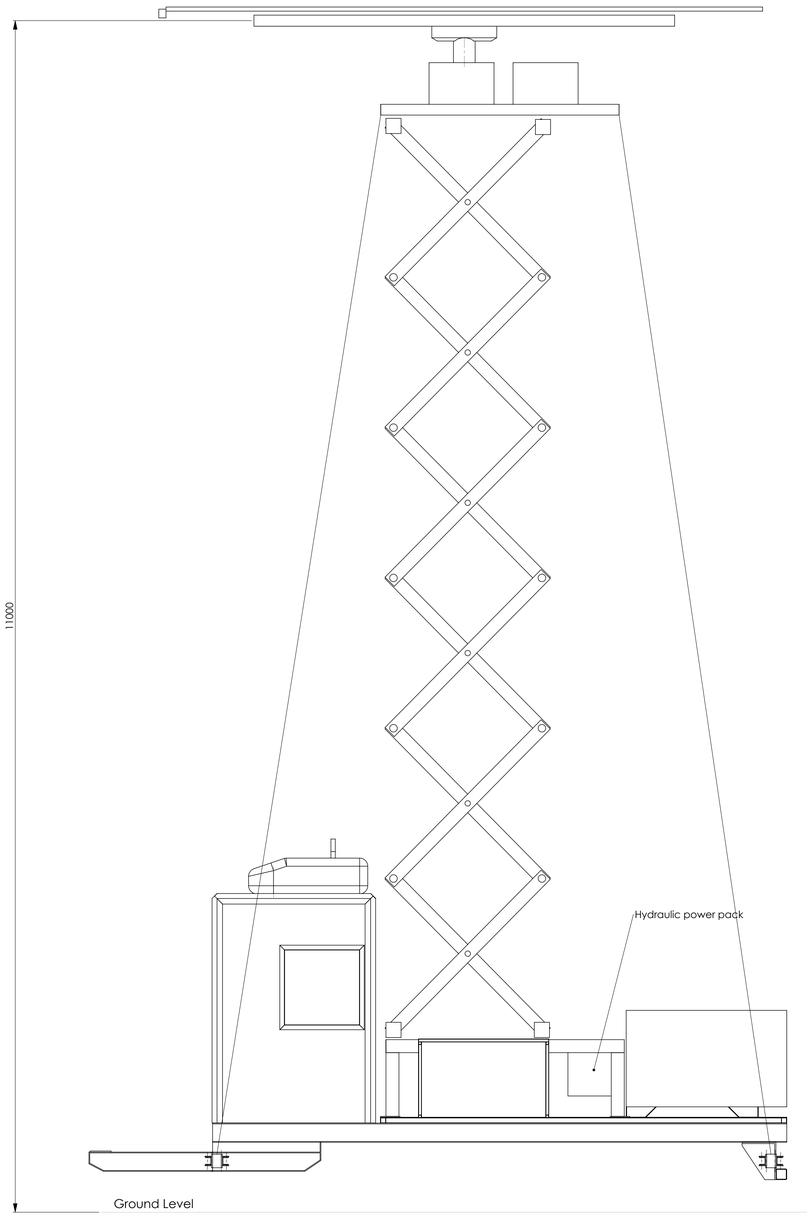

Front view

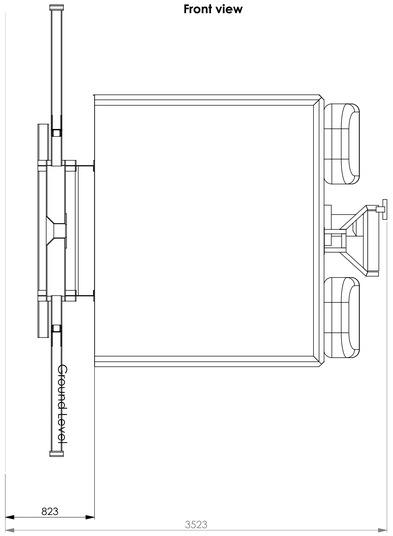

Plan View

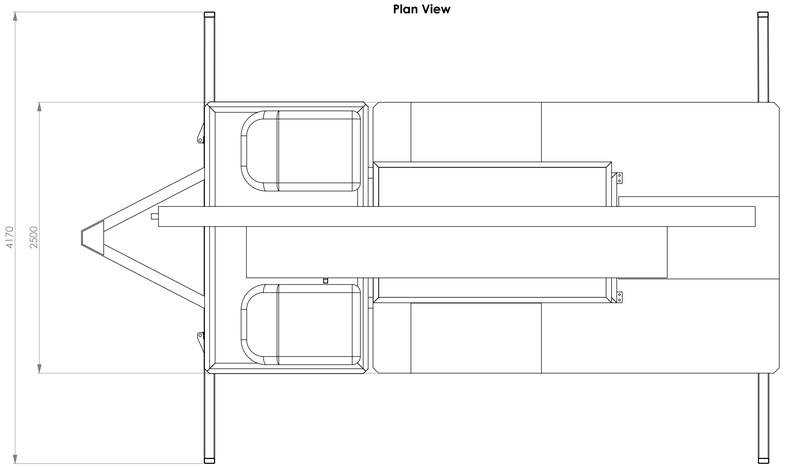

Side View

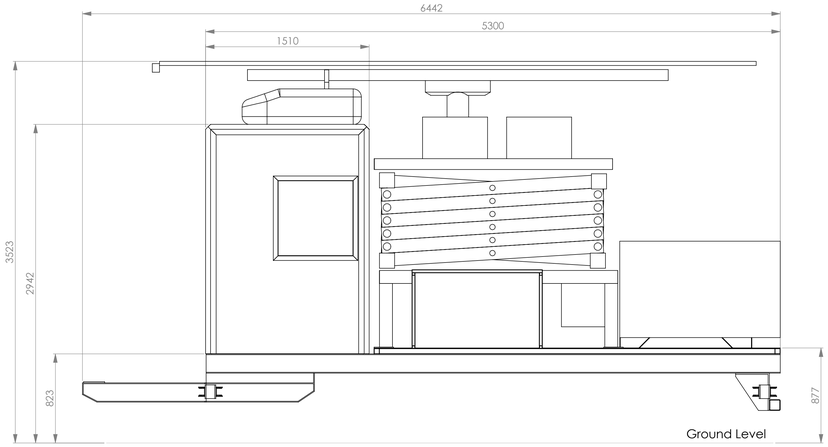

Cabin interior

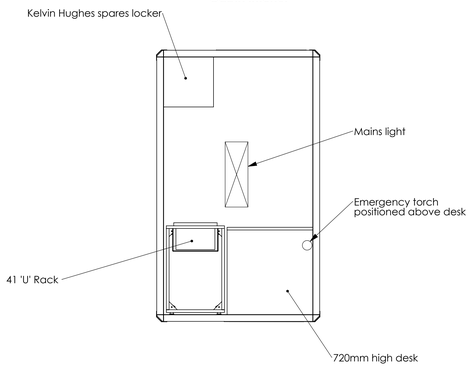

REVISIONS				
Rev No	Revision Note	Date	Signature	Checked
01	First Issue Of Drawing	26/03/2010	BSL	RJH

A Sowd (2 Bentley) Ltd
Centre Park, Clacton Road
Harwich, Essex, CO12 4SL
England
Tel: 01206 250300 Fax: 01206 250300

THE INFORMATION CONTAINED IN THIS DRAWING IS THE SOLE PROPERTY OF A Sowd (2 Bentley) Ltd. ANY REPRODUCTION IN PART OR WHOLE WITHOUT THE WRITTEN PERMISSION OF A Sowd (2 Bentley) Ltd IS PROHIBITED.

DRAWN	APPROVED	DATE	Projection
BSL	RJH	25/03/2010	Third angle

32479 Kelvin Hughes 4945 Overview

SHEET	REVISION	SCALE	TOLERANCE :	IF IN DOUBT ASK
1 OF 1	01	1:20	±0.25mm ±0.25°	DIMENSIONS IN MILLIMETRES