PROJECT INFORMATION

APPLICANT/LEASSEE:
NAME: AMERICAN TOWER CORPORATION
ADDRESS: 8505 FREEPORT PARKWAY
CITY, STATE, ZIP: IRVING, TX 75063
CONTACT: JERRY FOLK
PHONE: IRVING, TX 75063

TOWER OWNER:
NAME: AMERICAN TOWER CORPORATION
ADDRESS: 8505 FREEPORT PARKWAY
CITY, STATE, ZIP: IRVING, TX 75063
CONTACT: JERRY FOLK
PHONE: IRVING, TX 75063

PROPERTY OWNER:
NAME: AMERICAN TOWER CORPORATION
ADDRESS: 10 PRESIDENTIAL WAY
CITY, STATE, ZIP: WOBURN, MA 01801
CONTACT: ARLINDO NETO
PHONE: 781-926-7185

LATITUDE 33.16769167

LONGITUDE: -97.11199444

AMSL: 662' AMSL

JURISDICTION: CITY OF DENTON, TX

TELEPHONE CO.: TBD

POWER CO.: TBD

DRIVING DIRECTIONS

FROM DT DALLAS

TURN LEFT (NORTH) ONTO S STEMMONS FWY
TURN LEFT (WEST) ONTO REUNION BLVD, THEN IMMEDIATELY TURN RIGHT (NORTH) ONTO RAMP
TAKE RAMP (RIGHT) ONTO I-35E [US-77]
AT EXIT 462, TAKE RAMP (RIGHT) ONTO S I-35E [S INTERSTATE 35 E]
TURN LEFT (SOUTH-WEST) ONTO LILLIAN MILLER PKWY
KEEP STRAIGHT ONTO LOCAL ROAD(S)
KEEP STRAIGHT ONTO FM-2181 [TEASLEY LN]
ARRIVE 3562 TEASLEY LN, DENTON, TX 76210

AMERICAN TOWER CORPORATION

10 PRESIDENTIAL WAY
WOBURN, MA 01801
781-926-4500

SITE NAME

DENTON BROADCAST/89137

911 SITE ADDRESS

3562 TEASLEY LANE
DENTON, TX 76210

(DENTON COUNTY)

APPROVALS

CONSTRUCTION MANAGER: ENGINEER:

CONSTRUCTION MANAGER: CONTRACTOR:

PROPERTY OWNER: CONTRACTOR:

SHEET INDEX

SHEET NUMBER	SHEET NAME	CURRENT REVISION
T01	TITLE PAGE	0
N01	GENERAL NOTES	0
C01	OVERALL SITE PLAN	0
C02	DETAIL SITE PLAN	0
C03	TOWER ELEVATION / ANTENNA ORIENTATION	0
C04	DETAILS	0
C05	FENCE DETAILS	0
S01	CONC. PAD DETAIL	0
S02	ICE SHIELD DETAIL	0
E01	ELECTRICAL SITE PLAN	0
E02.0	ELECTRICAL RISER DIAGRAM	0
E03	ELECTRICAL GROUNDING PLAN	0
E03.1	EQUIPMENT GROUNDING PLAN	0
E04	ELECTRICAL DETAILS	0
E05	ELECTRICAL DETAILS	0
E06	ELECTRICAL SPECIFICATIONS	0
M01	MECHANICAL	0
M02	MECHANICAL SPECIFICATION	0

SCOPE OF WORK:

1. INSTALL NEW CONCRETE PAD FOR OUTDOOR EQUIPMENT
2. INSTALL NEW ELECTRICAL SERVICE FROM NEW TRANSFORMER TO EXISTING BUILDING
3. INSTALL NEW LIGHTING FIXTURES
4. INSTALL (4) NEW HEAT EXCHANGERS
5. INSTALL NEW EQUIPMENT INDOOR CABINETS
6. INSTALL NEW CHAIN LINK FENCE AND GATE
7. INSTALL NEW ICE BRIDGE FOR NEW CABLE
8. INSTALL NEW ANTENNA ON EXISTING TOWER
9. INSTALL NEW CANOPY OVER OUTDOOR EQUIPMENT
10. INSTALL NEW GYP BOARD WALL, TAPE BED AND PAINT (COLOR TO BE DETERMINED BY ATC CONSTRUCTION MANAGER)
11. INSTALL NEW HVAC SYSTEM AND DUCT WORK
12. REPLACE EXISTING (3) EXTERIOR DOORS W/ NEW DOOR, FRAME & HARDWARE (KEYED LOCKS) PAINT TO MATCH
13. REMOVE ALL EXISTING DUCT WORK AND ELECTRICAL PANELS AND UNUSED CONDUIT ON CEILING AND WALLS. (TOWER CONTROL EQUIPMENT TO REMAIN)
14. SEAL ANY OPENINGS IN EQUIPMENT AREA WATER TIGHT
15. STRIP FLOOR AND SEAL ALL CRACKS, EPOXY SEAL FLOOR, INSTALL NEW 4" RUBBER COVE BASE COLOR TO BE SELECTED

CELERIS GROUP

Celeris Group Consulting Engineers
2000 E. Lamar Blvd., Suite 550
Arlington, TX 76006
Phone: 817-446-1700
Fax: 817-460-0677
www.celerisgroup.com

Engineer:
Celeris Group Consulting Engineers
2000 E. Lamar Blvd., Suite 550
Arlington, TX 76006
Phone: 817-446-1700
Fax: 817-460-0677
Registration No: F-13992

Electrical Engineer:
Torres Engineering Services, Inc.
8237 Delafield Dr.
Ft. Worth, TX 76131
Phone: 682-556-0848
Registration No: F-10147

STAMP:

STATE OF TEXAS
ZHENJING GUO
84667
LICENSED
PROFESSIONAL ENGINEER
1/30/2018

No.	Description	Date
0	ISSUED FOR CONSTRUCTION	01/31/18

VICINITY MAP

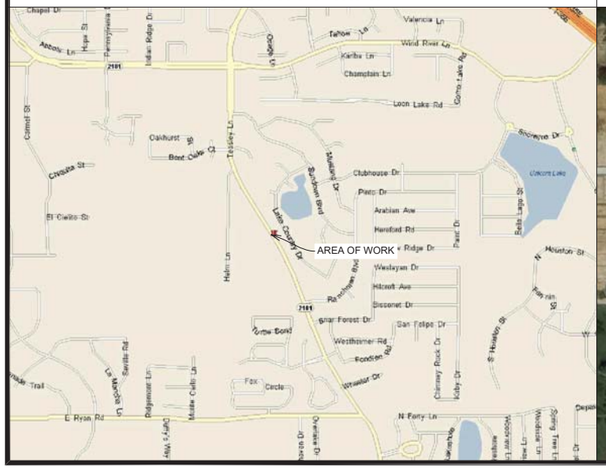

SITE PHOTO

DESIGN TEAM

DESIGN ENGINEER:
NAME: CELERIS GROUP CONSULTING ENGINEERS
ADDRESS: 2000 E. LAMAR BLVD., SUITE 550
CITY, STATE, ZIP: ARLINGTON, TX 76006
CONTACT: MARK STAPLETON
PHONE: 817-446-1700

BUILDING CODES

ALL WORK AND MATERIALS SHALL BE PERFORMED AND INSTALLED IN ACCORDANCE WITH THE CURRENT EDITIONS OF THE FOLLOWING CODES AS ADOPTED BY THE LOCAL AUTHORITIES HAVING JURISDICTION.

1. 2015 INTERNATIONAL BUILDING CODE
2. 2017 NATIONAL ELECTRIC CODE
3. ADOPTED CITY/COUNTY ORDINANCES
4. TIA/EIA-222

IF YOU DIG IN ANY STATE DIAL 811 FOR THE LOCAL "ONE CALL CENTER" IT'S THE LAW

THE UTILITIES SHOWN HEREIN ARE FOR THE CONTRACTORS CONVENIENCE ONLY. THERE MAY BE OTHER UTILITIES NOT SHOWN ON THESE PLANS. THE ENGINEER/SURVEYOR ASSUMES NO RESPONSIBILITY FOR THE LOCATIONS SHOWN AND IT SHALL BE THE CONTRACTOR'S RESPONSIBILITY TO VERIFY ALL THE UTILITIES WITHIN THE LIMITS OF THE WORK. ALL DAMAGE MADE TO THE EXISTING UTILITIES BY THE CONTRACTOR SHALL BE THE SOLE RESPONSIBILITY OF THE CONTRACTOR.

AMERICAN TOWER CORPORATION

ATC SITE # 89137

DENTON BROADCAST

TITLE PAGE

Project number	17-10610
Date	01/31/18
Drawn by	KDR
Checked by	ZG

T01

Scale

1. GENERAL REQUIREMENTS

A. PURPOSE AND INTENT

1. THE DRAWING AND SPECIFICATIONS ARE INTENDED TO BE FULLY EXPLANATORY AND SUPPLEMENTARY, HOWEVER, SHOULD ANYTHING BE SHOWN, INDICATED, OR SPECIFIED ON ONE AND NOT THE OTHER, IT SHALL BE DONE THE SAME AS IF SHOWN, INDICATED, OR SPECIFIED IN BOTH. SHOULD THERE BE ANY DISCREPANCIES BETWEEN REQUIREMENTS SHOWN IN BOTH, THE MORE STRINGENT REQUIREMENTS SHALL APPLY.

2. THE INTENTION OF THE DOCUMENTS IS TO INCLUDE ALL LABOR AND MATERIALS REASONABLY NECESSARY FOR THE PROPER EXECUTION AND COMPLETION OF THE WORK AS STIPULATED IN THE CONTRACT. (NECESSARY TAXES)

B. CONFLICTS

1. VERIFY ALL MEASUREMENTS AT THE SITE BEFORE ORDERING MATERIAL OR DOING ANY WORK. NO EXTRA CHARGE OR COMPENSATION WILL BE ALLOWED DUE TO DIFFERENCES BETWEEN ACTUAL DIMENSIONS OR DIMENSIONS SHOWN ON PLANS. SUBMIT NOTICE OF ANY DISCREPANCY IN DIMENSIONS OR OTHERWISE TO ATC FOR RESOLUTION BEFORE PROCEEDING WITH THE WORK.

2. **NO PLEA OF IGNORANCE OF CONDITIONS THAT EXIST, OR OF DIFFICULTIES OF CONDITIONS THAT MAY BE ENCOUNTERED, OR OF ANY OTHER RELEVANT MATTER CONCERNING THE EXECUTION OF THE WORK WILL BE ACCEPTED AS AN EXCUSE FOR ANY FAILURE OR OMISSION ON THE PART OF THE CONTRACTOR TO FULFILL EVERY DETAIL OF ALL THE REQUIREMENTS OF THE CONSTRUCTION DOCUMENTS GOVERNING THE WORK.**

C. CLEANING

1. KEEP THE SITE FREE FROM ACCUMULATION OF WASTE AND RUBBISH CAUSED BY EMPLOYEES. AT THE COMPLETION OF THE WORK, REMOVE ALL WASTE AND NON-CONSTUCTION MATERIAL, INCLUDING ALL CONTRACTOR TOOLS, SCAFFOLDING, AND SURPLUS MATERIAL AND LEAVE SITE CLEAN AND READY FOR USE.

D. CODES

1. CONTRACTOR SHALL BE RESPONSIBLE FOR FOLLOWING ALL LAWS, REGULATIONS, AND RULES PROMULGATED BY FEDERAL STATE AND LOCAL AUTHORITIES WITH JURISDICTION OVER THE LOCATION. THIS RESPONSIBILITY IS IN EFFECT REGARDLESS OF WEATHER THE LAW, ORDINANCE, REGULATION OR RULE IS MENTIONED IN THESE SPECIFICATIONS.

E. LICENSING

CONTRACTOR SHALL HAVE AND MAINTAIN A VALID CONTRACTOR'S LICENSE FOR THE LOCATION IN WHICH THE WORK IS TO BE PERFORMED. FOR JURISDICTIONS THAT LICENSE INDIVIDUAL TRADES, THE TRADESMAN OR SUBCONTRACTOR PERFORMING THOSE TRADES SHALL BE LICENSED. RESEARCH AND COMPLY WITH THE LICENSING LAWS, PAY LICENSE FEES, AND SELECT AND INFORM SUBCONTRACTORS REGARDING THESE LAWS.

F. OSHA

FOLLOW ALL APPLICABLE RULES AND REGULATIONS OF THE OCCUPATIONAL SAFETY AND HEALTH ADMINISTRATIONS AND STATE LAWS BASED IN THE FEDERAL OCCUPATIONAL SAFETY AND HEALTH ACT. THESE REGULATIONS INCLUDE, BUT ARE NOT LIMITED TO, REGULATIONS DEALING WITH TOWER CONSTRUCTION AND SAFETY, EXCAVATIONS AND TRENCHING, AND WORK IN CONFINED SPACES. ENSURE THAT EMPLOYEES AND SUBCONTRACTORS WEAR HARD HATS AT ALL TIMES DURING CONSTRUCTION.

G. PHOTOS

PROVIDE PHOTOGRAPHIC (TIME STAMPED / GEO TAGGED) EVIDENCE OF ALL FOUNDATION INSTALLATION, GROUNDING, AND TRENCHING AFTER PLACEMENT OF UTILITIES PRIOR TO BACKFILL.

H. BUILDING PERMITS

1. CONTRACTOR WILL SUBMIT CONSTRUCTION DOCUMENTS TO THE JURISDICTIONAL AUTHORITY FOR PLAN CHECK AND REVIEW. CONTRACTOR WILL SUBMIT LICENSING AND WORKMAN'S COMPENSATION INFORMATION TO THE JURISDICTION AS REQUIRED TO OBTAIN THE BUILDING PERMIT, CONTRACTOR SHALL COORDINATE AND SCHEDULE REQUIRED INSPECTIONS AND POST REQUIRED PERMITS AT THE JOB SITE. COMPLY WITH SPECIFIC PROJECT. RELATED REQUESTS AND SUGGESTION MADE BY BUILDING INSPECTOR, AND INFORM CONSTRUCTION MANAGER OF ANY SUCH WORK THAT MAY BE BEYOND THE SCOPE OF THE CONTRACT OR DEVIATE FROM THE CONSTRUCTION DOCUMENTS, ATC WILL REIMBURSE THE CONTRACTOR FOR FEES, FOR PLAN REVIEW, BUILDING PERMIT. CONNECTIONS, AND INSPECTION. (INCLUDED IN THE BASE PROPOSAL)

I. FAA PERMIT AND TOWER LIGHTING

1. REFER TO CONSTRUCTION DOCUMENTS AND CONSTRUCTION MANAGER FOR FAA AND STATE LIGHTING REQUIREMENTS. CONTRACTOR SHALL PROVIDE TEMPORARY FM APPROVED LIGHTING UNTIL PERMANENT LIGHTING IS OPERATIONAL.

J. TOWER SECURITY

1. IF REQUIRED, TOWER MUST BE FENCED, TEMPORARILY OR PERMANENTLY WITHIN 24 HOURS OF ERECTION. DO NOT ALLOW THE GATE ACCESSING THE TOWER AREA TO REMAIN OPEN OR UNATTENDED ANY TIME FOR ANY REASON. KEEP THE GATE CLOSED AND LOCKED WHEN NOT IN USE.

2. CONSTRUCTION SITE SHALL REMAIN SECURE AT ALL TIMES

K. SITE CONTROL

1. THE CONTRACTOR IS COMPLETELY RESPONSIBLE FOR CONTAINMENT OF SEDIMENT AND CONTROL OF EROSION AT THE SITE. ANY DAMAGE TO ADJACENT OR DOWNSTREAM PROPERTIES WILL BE CORRECTED BY THE CONTRACTOR AT NO EXPENSE TO ATC.

2. THE CONTRACTOR IS TO MAINTAIN ADEQUATE DRAINAGE AT ALL TIMES. DO NOT ALLOW WATER TO STAND OR POND. ANY DAMAGE TO STRUCTURES OR WORK ON THE SITE CAUSED BY INADEQUATE MAINTENANCE OF DRAINAGE PROVISIONS WILL BE THE RESPONSIBILITY OF THE CONTRACTOR AND ANY COST ASSOCIATED WITH REPAIRS FOR SUCH DAMAGE WILL BE AT THE CONTRACTOR'S EXPENSE.

3. ALL WASTE MATERIAL SHALL BE PROPERLY DISPOSED OF OFF-SITE OR AS DIRECTED BY THE CONSTRUCTION MANAGER AND IN ACCORDANCE WITH JURISDICTIONAL AUTHORITIES.

L. LIVESTOCK PROTECTION

1. PROTECT AND SECURE LIVESTOCK. MAINTAIN AND SECURE EXISTING PERIMETER FENCING AND OR GATED ENCLOSURES.

2. SITE PREPARATION

A. SCOPE OF WORK INCLUDES

1. PROTECTION OF EXISTING TREES. VEGETATION AND LANDSCAPING MATERIALS WHICH MIGHT BE DAMAGED BY CONSTRUCTION ACTIVITIES.

2. TRIMMING OF EXISTING TREES AND VEGETATION AS REQUIRED FOR PROTECTION DURING CONSTRUCTION ACTIVITIES.

3. CLEARING AND GRUBBING OF STUMPS, VEGETATION, DEBRIS. RUBBISH, DESIGNATED TREES AND SITE IMPROVEMENTS.

4. TOPSOIL STRIPPING AND STOCKPILING.

5. TEMPORARY EROSION CONTROL, SILTATION CONTROL, AND DUST CONTROL CONFORMING TO LOCAL REQUIREMENTS AS APPLICABLE.

6. TEMPORARY PROTECTION OF ADJACENT PROPERTY, STRUCTURES, BENCHMARKS, AND MONUMENTS.

7. PROTECTION AND TEMPORARY RELOCATION, STORAGE AND RE-INSTALIATION OF EXISTING FENCING AND OTHER SITE IMPROVEMENTS SCHEDULED FOR REUSE.

8. REMOVAL AND LEGAL DISPOSAL OF CLEARED MATERIALS.

B. PRODUCTS AND MATERIALS (AS APPROVED BY CONSTRUCTION MANAGER OR AS NOTED IN CONSTRUCTION DOCUMENTS.)

1. MATERIALS USED FOR TREE PROTECTION, EROSION CONTROL, SILTATION CONTROL, AND DUST CONTROL

3. EARTHWORK

A. SCOPE OF WORK INCLUDES

1. EXCAVATION, TRENCHING, FILLING, COMPACTION, AND GRADING FOR STRUCTURES, SITE IMPROVEMENTS AND UTILITIES

2. MATERIALS FOR SUB-BASE, DRAINAGE, BACKFILL AND GRAVEL FOR SLABS, PAVEMENTS AND IMPROVEMENTS.

3. ROCK EXCAVATION WITHOUT BLASTING.

4. SUPPLY OF ADDITIONAL MATERIALS FROM OFFSITE AS REQUIRED.

5. REMOVAL AND LEGAL DISPOSAL OF EXCAVATED MATERIALS AS REQUIRED.

B. QUALITY ASSURANCE

1. COMPACTION:

A. UNDER STRUCTURES, BUILDING SLABS, PAVEMENTS AND WALKWAYS WILL OBTAIN A 95 PERCENT COMPACTION AT A MAXIMUM DRY DENSITY AS DETERMINED BY ASTM D-1557 OR WITHIN PLUS OR MINUS 3 PERCENT OF OPTIMUM MOISTURE CONTENT.

2. GRADING TOLERANCES OUTSIDE BUILDING LINES:

A. LAWNS, UNPAVED AREAS AND WALKS PLUS OR MINUS 1 INCH.

B. UNDER PAVEMENTS, PLUS OR MINUS 1/2 INCH.

3. GRADING TOLERANCES FOR FILL UNDER ALL CONCRETE APPLICATIONS:

A. PLUS OR MINUS 1/2 INCH MEASURED WITH 10 FOOT STRAIGHTEDGE.

C. PRODUCTS AND MATERIALS (AS APPROVED BY CONSTRUCTION MANAGER OR AS NOTED IN CONSTRUCTION DOCUMENTS.)

1. SUB-BASE MATERIAL: GRADED MIXTURE OF NATURAL OR CRUSHED GRAVEL, CRUSHED STORE OR SLAG, AND NATURAL SAND.

2. WASHED MATERIAL, EVENLY GRADED MIXTURE OF CRUSHED STONE OR GRAVEL WITH 95 PERCENT PASSING A 1-1/2 INCH SIEVE.

3. GRADING MATERIAL WILL CONSIST OF SATISFACTORY NATIVE OR IMPORTED SOIL MATERIALS FREE OF CLAY, ROCK OR GRAVEL NOT LARGER THAN 2 INCHES IN ANY DIMENSION. DEBRIS, WASTE, FROZEN MATERIALS AND OTHER UNSUITABLE MATERIALS WILL NOT BE ALLOWED FOR USE. IMPORTED MATERIALS SHALL HAVE A CLAY CONTENT NO MORE THAN 5 PERCENT.

4. GRAVEL MATERIAL: EVENLY GRADED MIXTURE OF CRUSHED STONE OR GRAVEL WITH 95 PERCENT PASSING A 1-1/2 INCH SIEVE.

5. GEOTEXTILE FABRIC: AS PER CONSTRUCTION DOCUMENTS.

6. PROVIDE RIP RAP AS NECESSARY

D. CLEARING AND GRUBBING

1. REMOVE ALL VEGETATION AND MATERIALS AS REQUIRED. REMOVE STUMPS COMPLETELY UNDER FOUNDATIONS AND ROADWAY. DISPOSE OF CLEARING AND GRUBBING OFF-SITE OR IN AN ON-SITE LOCATION APPROVED BY CONSTRUCTION MANAGER.

E. STRIPPING

1. STRIP NOT LESS THAN 3 INCHES OF SOD AND TOPSOIL FROM AREAS THAT WILL UNDERLAY GRAVEL, PAVEMENT, NEW STRUCTURES OR NEW EMBANKMENTS. STOCKPILE STRIPPING ON-SITE FOR RE-USE IN FINAL LANDSCAPING.

F. COMMON EXCAVATION

1. EXCAVATE TO DEPTH, LINES AND GRADES SHOWN ON THE PLANS OR AS OTHERWISE SPECIFIED.

2. TEMPORARILY STOCKPILE ON-SITE EXCAVATION AT AN APPROVED LOCATION WITHIN THE WORK AREA UNTIL SITE GRADING IS COMPLETE. STOCKPILE SHALL NOT EXCEED 10 FEET IN HEIGHT.

3. LEGALLY DISPOSE OF EXCESS COMMON EXCAVATION OFF-SITE.

G. EMBANKMENT

1. CONSTRUCT EMBANKMENT TO THE LINES AND GRADE SHOWN ON THE DRAWINGS.

2. CONSTRUCT EMBANKMENT FROM ON-SITE EXCAVATION MATERIALS WHEN SUITABLE. USE IMPORTED BACKFILL ONLY AFTER AVAILABLE ON-SITE EXCAVATION MATERIALS HAVE BEEN USED.

3. CONSTRUCT IN LIFTS OF NOT MORE THAN 12 INCHES IN LOOSE DEPTH. THE FULL WIDTH OF THE CROSS SECTION SHALL BE BROUGHT UP UNIFORMLY.

4. MATERIAL SHALL BE PLACED IN LAYERS AND SHALL BE NEAR OPTIMUM MOISTURE CONTENT BEFORE ROLLING TO OBTAIN THE PRESCRIBED COMPACTION. WETTING OR DRYING OF THE MATERIAL AND MANIPULATION TO SECURE A UNIFORM MOISTURE CONTENT THROUGHOUT THE LAYER MAY BE REQUIRED. SUCH OPERATIONS SHALL BE INCLUDED IN THE APPROPRIATE BID ITEM. SHOULD THE MATERIAL BE TO WET TO PERMIT PROPER COMPACTION. IT IS THE CONTRACTOR'S RESPONSIBILITY TO UTILIZE MATERIAL WITH AN ACCEPTABLE MOISTURE CONTENT.

5. DO NOT PLACE FROZEN MATERIAL IN THE EMBANKMENT AND DO NOT PLACE EMBANKMENT MATERIAL UPON FROZEN MATERIAL.

6. CONTRACTOR SHALL BE RESPONSIBLE FOR THE STABILITY OF EMBANKMENTS AND THE REPLACEMENT OF ANY PORTION WHICH HAS BECOME DISPLACED DUE TO THE CONTRACTOR'S OPERATIONS.

7. START LAYERS IN THE DEEPEST PORTION OF THE FILL AND AS PLACEMENT PROGRESSES, CONSTRUCT LAYERS APPROXIMATELY PARALLEL TO THE FINISHED GRADE LINE.

8. ROUTE EQUIPMENT, BOTH LOADED AND EMPTY, OVER THE FULL WIDTH OF EMBANKMENT TO ENSURE UNIFORMITY OF MATERIAL PLACEMENT.

9. COMPACT EMBANKMENT UNDERLYING NEW GRAVEL PAVING, FLOOR SLABS AND STRUCTURES TO A 95 PERCENT COMPACTION AT A MAXIMUM DRY DENSITY AS DETERMINED BY ASTM D-1557 OR WITHIN PLUS OR MINUS 3 PERCENT OF OPTIMUM MOISTURE CONTENT. COMPACT NON-STRUCTURAL AREA EMBANKMENTS TO A MINIMUM OF 90 PERCENT OF ASTM D-1557.

H. SITE GRADING

1. USING ON-SITE EXCAVATION MATERIALS, SHAPE TRIM, FINISH AND COMPACT SURFACE AREAS TO CONFORM TO THE LINES. GRADES AND CROSS SECTIONS SHOWN ON THE DRAWINGS OR AS DESIGNATED BY THE CONSTRUCTION MANAGER.

2. GRADE SURFACES TO DRAIN AND ELIMINATE ANY PONDING OR EROSION.

3. ELIMINATE WHEEL RUTS BY REGRADING.

4. COMPACT AREAS OF UNDERLYING NEW GRAVEL, PAVING, FLOOR SLABS AND STRUCTURES TO A 95 PERCENT COMPACTION AT A MAXIMUM DRY DENSITY AS DETERMINED BY THE ASTM D-1557 OR WITHIN PLUS OR MINUS 3 PERCENT OF OPTIMUM MOISTURE CONTENT.

5. CONSTRUCT FINISHED SURFACE OF SITE GRADING AREAS WITHIN ONE INCH FROM SPECIFIED GRADE

I. SUBGRADE PREPARATION

1. SHAPE TOP OF SUBGRADE TO THE LINES AND GRADES SHOWN ON THE DRAWINGS.

2. MAINTAIN TOP OF SUBGRADE IN A FREE-DRAINING CONDITION.

3. DO NOT STOCKPILE MATERIALS ON TOP OF SUBGRADE UNLESS AUTHORIZED BY CONSTRUCTION MANAGER.

4. COMPACT THE TOP 12 INCHES OF SUBGRADE TO A 95 PERCENT COMPACTION AT A MAXIMUM DRY DENSITY AS DETERMINED BY ASTM D-1557 OR WITHIN PLUS OR MINUS 3 PERCENT OF THE OPTIMUM MOISTURE CONTENT.

5. CONSTRUCT TOP OF SUBGRADE WITHIN ONE INCH OF ESTABLISHED GRADE AND CROSS-SECTION.

J. GEOTEXTILE FABRIC

1. LAY 2 LAYERS OF MIRAFI N-SERIES GEOTEXTILE FABRIC OVER COMPACTED SUBGRADE IN THE COMPOUND AREA AND UNDER LENGTH OF ROAD (WHEN REQUIRED). LAP ALL JOINTS TO A MINIMUM OF 36 INCHES.

K. GRAVEL SURFACING

1. CONSTRUCT GRAVEL SURFACING AREAS USING CRUSHED AGGREGATE BASE AND FINISH COURSES AS SPECIFIED BY CONSTRUCTION MANAGER. SPREAD GRAVEL AND RAKE TO OBTAIN A UNIFORM SURFACE AREA.

L. LANDSCAPING

1. FURNISH, INSTALL AND MAINTAIN LANDSCAPE WORK AS SHOWN AND OR REQUIRED WITHIN THE CONSTRUCTION DOCUMENTS OR AS SPECIFIED IN THE CONSTRUCTION SPECIFICATIONS.

M. CONCRETE FORM WORK

1. FORMS: SMOOTH AND FREE OF SURFACE IRREGULARITIES. UTILIZE FORM RELEASE AGENTS.

2. CHAMFER EXPOSED EDGES OF ALL TOWER FOUNDATION SHALL RECEIVE A 3/4" X 3/4" 45 DEGREE CHAMFER. OTHER EXPOSED EDGES SHALL RECEIVE A TOOLED RADIUS FINISH.

3. UPON COMPLETION, REMOVE ALL FORMS INCLUDING THOSE CONCEALED OR BURIED.

4. REFER TO STRUCTURAL DRAWINGS FOR ADDITIONAL REQUIREMENTS.

5. GENERAL NOTES:

1. IT IS THE CONTRACTOR'S RESPONSIBILITY TO EXAMINE ALL PLAN SHEETS AND SPECIFICATIONS AND COORDINATE HIS WORK WITH THE WORK OF ALL OTHER CONTRACTORS TO ENSURE THAT WORK PROGRESSION IS NOT INTERRUPTED.

2. THE CONTRACTOR IS RESPONSIBLE FOR MAINTAINING A NEAT AND ORDERLY SITE, YARD AND GROUNDS. CONTRACTOR SHALL REMOVE AND DISPOSE OFF SITE ALL RUBBISH, WASTE MATERIALS, LITTER AND ALL FOREIGN SUBSTANCES. REMOVE PETROCHEMICAL SPILLS, STAINS AND OTHER FOREIGN DEPOSITS. RAKE GROUNDS TO A SMOOTH EVEN-TEXTURED SURFACE.

3. THE PLANS SHOW SOME KNOW SUBSURFACE STRUCTURES ABOVE GROUND STRUCTURES AND/OR UTILITIES BELIEVED TO EXIST IN THE WORKING AREA. EXACT LOCATION OF WHICH MAY VARY FROM THE LOCATIONS INDICATED, IN PARTICULAR. THE CONTRACTOR IS WARNED THAT THE EXACT OR EVEN APPROXIMATE LOCATIONS OF SUCH PIPELINES, SUBSURFACE STRUCTURES AND/OR UTILITIES IN THE AREA MAY BE SHOWN OR MAY NOT BE SHOWN AND IT SHALL BE HIS RESPONSIBILITY TO PROCEED WITH GREAT CARE IN EXCAVATION ANY WORK. 48 HOURS BEFORE YOU DIG, DRILL OR BLAST CALL LOCAL UTILITY LOCATOR COMPANY.

4. THE OWNER OR OWNERS'S REPRESENTATIVE SHALL BE NOTIFIED IN WRITING OF ANY CONDITIONS THAT VARY FROM THOSE SHOWN ON THE PLANS. THE CONTRACTOR'S WORK SHALL NOT VARY FROM THE PLANS WITHOUT THE EXPRESSED APPROVAL OF THE OWNER OR THE OWNER'S REPRESENTATIVE.

5. THE CONTRACTOR IS INSTRUCTED TO COOPERATE WITH ANY AND ALL OTHER CONTRACTORS PERFORMING WORK ON THIS JOB SITE DURING THE PERFORMANCE OF THIS CONTRACT

6. THE CONTRACTOR SHALL RESTORE ALL DAMAGED, PUBLIC OR PRIVATE, PROPERTY TO AT LEAST AS GOOD OF CONDITION AS BEFORE DISTURBED AS DETERMINED BY THE OWNER OR OWNER'S REPRESENTATIVE

7. THE CONTRACTOR SHALL COMPLY WITH ALL REQUIRED PERMITS.

8. THE CONTRACTOR SHALL PROTECT EXISTING PROPERTY LINE MONUMENTATION. ANY MONUMENTATION DISTURBED OR DESTROYED, AS JUDGED BY THE OWNER OR OWNER'S REPRESENTATIVE SHALL BE REPLACED.

9. ALL TRENCH EXCAVATION AND ANY REQUIRED SHEETING AND SHORING SHALL BE DONE IN ACCORDANCE WITH OSHA REGULATIONS FOR CONSTRUCTION.

10. CONTRACTOR SHALL BE RESPONSIBLE FOR DEWATERING AND THE MAINTENANCE OF SURFACE DRAINAGE DURING THE COURSE OF WORK.

11. ALL UTILITY WORK INVOLVING CONNECTIONS TO EXISTING SYSTEMS SHALL BE COORDINATED WITH THE OWNER OR OWNER'S REPRESENTATIVE AND THE UTILITY OWNER BEFORE EACH AND EVERY CONNECTION TO EXISTING SYSTEMS IS MADE.

12. MAINTAIN FLOW FOR ALL EXISTING UTILITIES.

13. ALL SITE FILL SHALL MEET SELECTED FILL STANDARDS AS DEFINED BY THE OWNER OR OWNER'S REPRESENTATIVE ON THE DRAWINGS OR GEOTECHNICAL REPORT RECOMMENDATIONS

14. CONTRACTOR TO GRADE ALL AREAS OF THE SITE TO PROVIDE POSITIVE DRAINAGE AWAY FROM THE BUILDING OR EQUIPMENT PAD AND THE TOWER.

15. IF NECESSARY, THE CONTRACTOR IS RESPONSIBLE FOR REPAIRING AND REGRADING ROADWAY AND ANY DISTURBED AREAS FOLLOWING INSTALLATION OF UTILITIES.

16. NO COMMERCIAL MESSAGES TO BE DISPLAYED ON TOWER

17. WATER AND SEWER SERVICES ARE NOT REQUIRED FOR THIS DEVELOPMENT

18. THE CONTRACTOR SHALL FURNISH AND INSTALL ALL MATERIALS UNLESS NOTED.

19. DETECTABLE WARNING TAPE IN TRENCHES

20. PORTABLE POTTY ON SITE 24/7 DURING CONSTRUCTION.

ENSURE THE AMERICAN TOWER CORPORATION SPECIFICATIONS & STANDARDS ARE USED FOR ALL PHASES OF THE PROJECT.

CELERIS GROUP

Celeris Group Consulting Engineers
2000 E. Lamar Blvd., Suite 550
Arlington, TX 76006
Phone: 817-446-1700
Fax: 817-460-0677
www.celerisgroup.com

Engineer:
Celeris Group Consulting Engineers
2000 E. Lamar Blvd., Suite 550
Arlington, TX 76006
Phone: 817-446-1700
Fax: 817-460-0677
Registration No: F-13992

Electrical Engineer:
Torres Engineering Services, Inc.
8237 Delafield Dr.
Ft. Worth, TX 76131
Phone: 682-556-0848
Registration No: F-10147

STAMP:

STATE OF TEXAS
ZHENJING GUO
84667
LICENSED
PROFESSIONAL ENGINEER
1/30/2018

No.	Description	Date
0	ISSUED FOR CONSTRUCTION	01/31/18

AMERICAN TOWER CORPORATION

ATC SITE # 89137

DENTON BROADCAST

GENERAL NOTES

Project number	17-10610
Date	01/31/18
Drawn by	KDR
Checked by	ZG

N01

Scale

N MN
3°42' E
NORTH

ENSURE THE AMERICAN TOWER CORPORATION SPECIFICATIONS & STANDARDS ARE USED FOR ALL PHASES OF THE PROJECT.

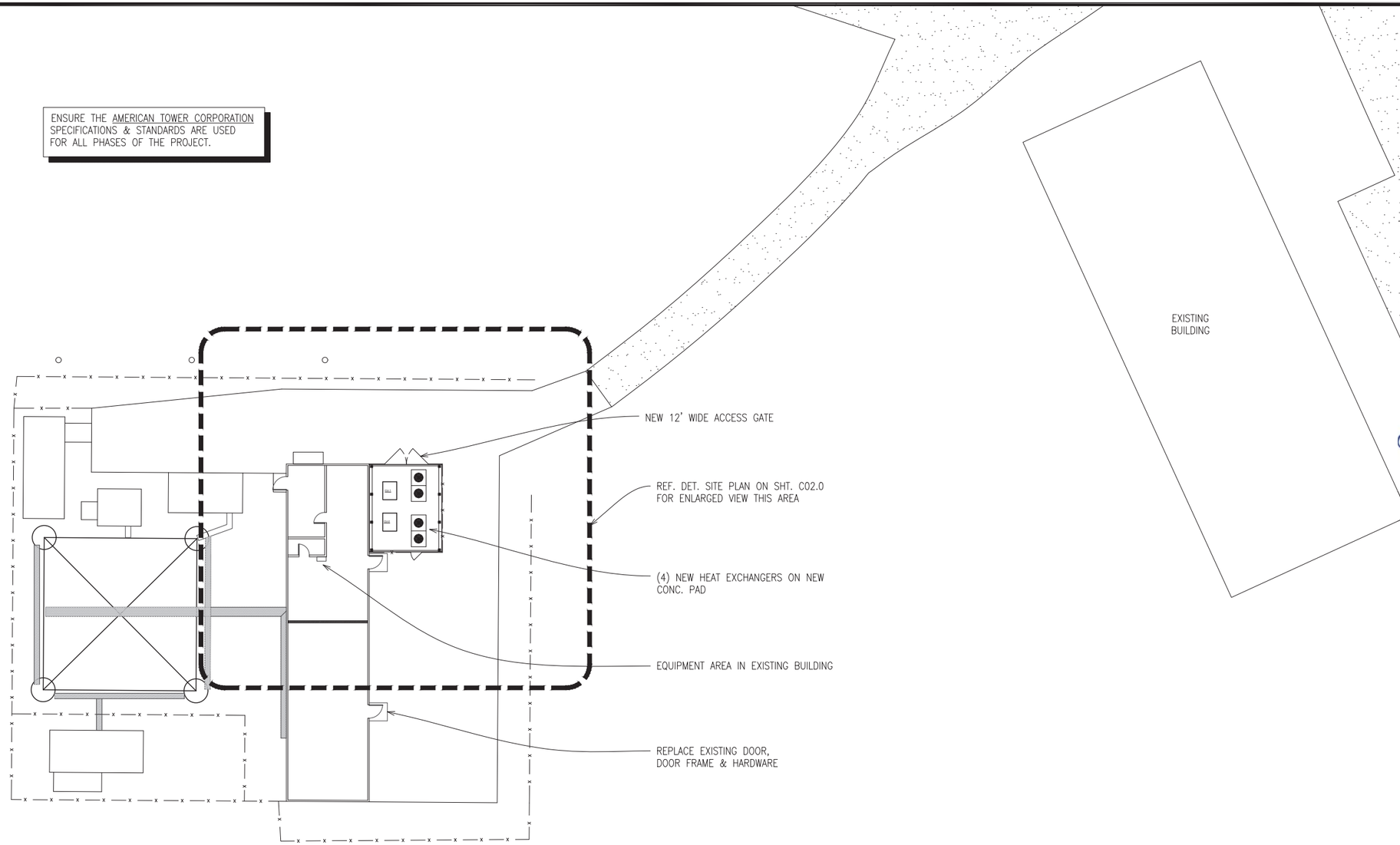

1 SITE PLAN
SCALE: (34" X 22") 1"=30'-0"
SCALE: (17" X 11") 1"=60'-0"
SCALE (FEET)
0 30 60 90 120

CELERIS GROUP

Celeris Group Consulting Engineers
2000 E. Lamar Blvd., Suite 550
Arlington, TX 76006
Phone: 817-446-1700
Fax: 817-460-0677
www.celerisgroup.com

Engineer:
Celeris Group Consulting Engineers
2000 E. Lamar Blvd., Suite 550
Arlington, TX 76006
Phone: 817-446-1700
Fax: 817-460-0677
Registration No: F-13992

Electrical Engineer:
Torres Engineering Services, Inc.
8237 Delafield Dr.
Ft. Worth, TX 76131
Phone: 682-556-0848
Registration No: F-10147

STAMP:
STATE OF TEXAS
ZHENJING GUO
84667
LICENSED
PROFESSIONAL ENGINEER
1/30/2018

No.	Description	Date
0	ISSUED FOR CONSTRUCTION	01/31/18

AMERICAN TOWER CORPORATION

ATC SITE # 89137

DENTON BROADCAST

OVERALL SITE PLAN

Project number	17-10610
Date	01/31/18
Drawn by	KDR
Checked by	ZG

C01

Scale

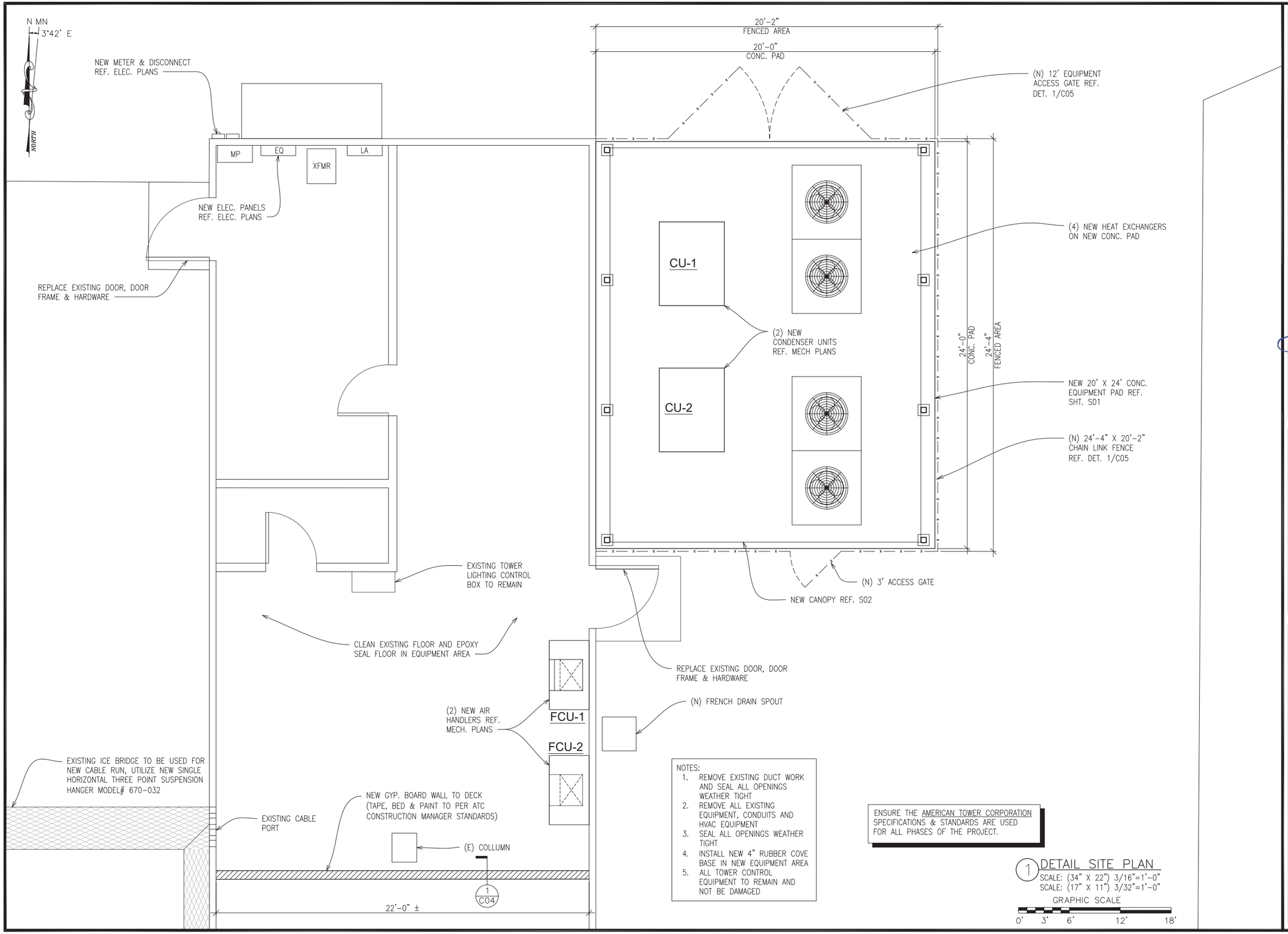

NOTES:
1. REMOVE EXISTING DUCT WORK AND SEAL ALL OPENINGS WEATHER TIGHT
2. REMOVE ALL EXISTING EQUIPMENT, CONDUITS AND HVAC EQUIPMENT
3. SEAL ALL OPENINGS WEATHER TIGHT
4. INSTALL NEW 4" RUBBER COVE BASE IN NEW EQUIPMENT AREA
5. ALL TOWER CONTROL EQUIPMENT TO REMAIN AND NOT BE DAMAGED

ENSURE THE AMERICAN TOWER CORPORATION SPECIFICATIONS & STANDARDS ARE USED FOR ALL PHASES OF THE PROJECT.

1 DETAIL SITE PLAN
SCALE: (34" X 22") 3/16"=1'-0"
SCALE: (17" X 11") 3/32"=1'-0"
GRAPHIC SCALE
0' 3' 6' 12' 18'

CELERIS GROUP

Celeris Group Consulting Engineers
2000 E. Lamar Blvd., Suite 550
Arlington, TX 76006
Phone: 817-446-1700
Fax: 817-460-0677
www.celerisgroup.com

Engineer:
Celeris Group Consulting Engineers
2000 E. Lamar Blvd., Suite 550
Arlington, TX 76006
Phone: 817-446-1700
Fax: 817-460-0677
Registration No: F-13992

Electrical Engineer:
Torres Engineering Services, Inc.
8237 Delafield Dr.
Ft. Worth, TX 76131
Phone: 682-556-0848
Registration No: F-10147

STAMP:
STATE OF TEXAS
ZHENJING GUO
84667
LICENSED
PROFESSIONAL ENGINEER
1/30/2018

No.	Description	Date
0	ISSUED FOR CONSTRUCTION	01/31/18

AMERICAN TOWER CORPORATION

ATC SITE # 89137

DENTON BROADCAST

DETAIL SITE PLAN

Project number	17-10610
Date	01/31/18
Drawn by	KDR
Checked by	ZG

C02

Scale

PRIOR TO INSTALLING ANY EQUIPMENT ON TOWER, CONTRACTOR SHALL REFER TO THE CURRENT STRUCTURAL ANALYSIS/TOWER DRAWINGS BY TOWER MANUFACTURER.

ENSURE THE AMERICAN TOWER CORPORATION SPECIFICATIONS & STANDARDS ARE USED FOR ALL PHASES OF THE PROJECT.

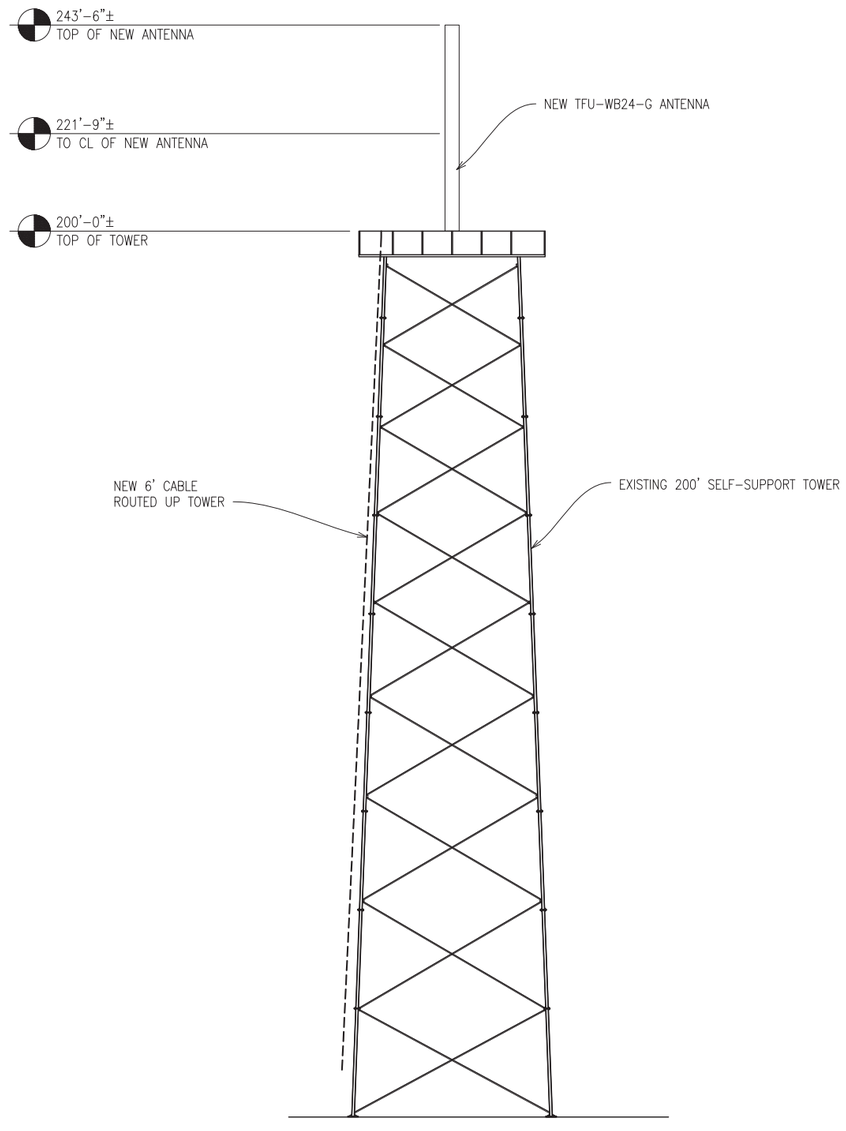

1 TOWER ELEVATION
SCALE: NTS

CELERIS GROUP

Celeris Group Consulting Engineers
2000 E. Lamar Blvd., Suite 550
Arlington, TX 76006
Phone: 817-446-1700
Fax: 817-460-0677
www.celerisgroup.com

Engineer:
Celeris Group Consulting Engineers
2000 E. Lamar Blvd., Suite 550
Arlington, TX 76006
Phone: 817-446-1700
Fax: 817-460-0677
Registration No: F-13992

Electrical Engineer:
Torres Engineering Services, Inc.
8237 Delafield Dr.
Ft. Worth, TX 76131
Phone: 682-556-0848
Registration No: F-10147

STAMP:

STATE OF TEXAS
ZHENJING GUO
84667
LICENSED
PROFESSIONAL ENGINEER

1/30/2018

No.	Description	Date
0	ISSUED FOR CONSTRUCTION	01/31/18

AMERICAN TOWER CORPORATION

ATC SITE #
89137

DENTON
BROADCAST

TOWER ELEVATION /
ANTENNA ORIENTATION

Project number	17-10610
Date	01/31/18
Drawn by	KDR
Checked by	ZG

C03

Scale

NOTE:
SEAL ALL WALL PENETRATIONS AS NECESSARY.

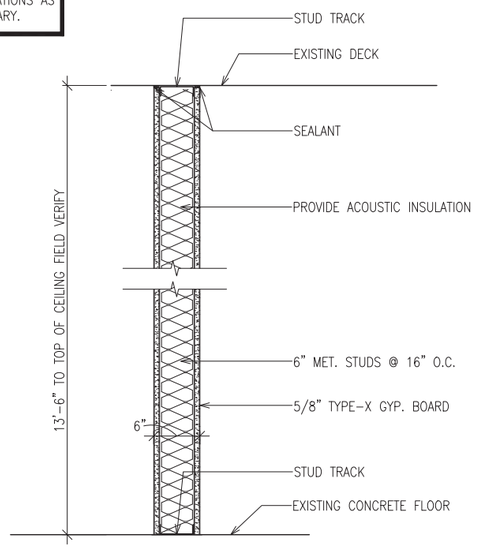

1 WALL SECTION
SCALE: NTS

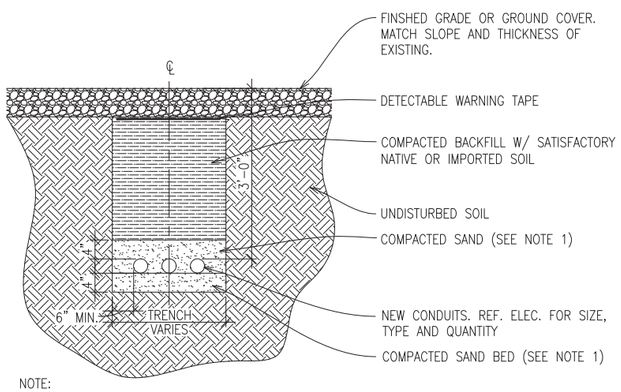

NOTE:
1. LEAN CONCRETE, RED-COLORED TOP, MAY BE USED IN PLACE OF COMPACTED SAND.

2 UTILITY TRENCH DETAIL
SCALE: NTS

CELERIS GROUP

Celeris Group Consulting Engineers
2000 E. Lamar Blvd., Suite 550
Arlington, TX 76006
Phone: 817-446-1700
Fax: 817-460-0677
www.celerisgroup.com

Engineer:
Celeris Group Consulting Engineers
2000 E. Lamar Blvd., Suite 550
Arlington, TX 76006
Phone: 817-446-1700
Fax: 817-460-0677
Registration No: F-13992

Electrical Engineer:
Torres Engineering Services, Inc.
8237 Delafield Dr.
Ft. Worth, TX 76131
Phone: 682-556-0848
Registration No: F-10147

STAMP:

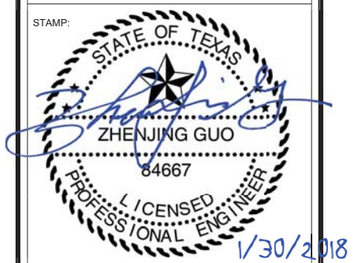

No.	Description	Date
0	ISSUED FOR CONSTRUCTION	01/31/18

AMERICAN TOWER CORPORATION

ATC SITE # 89137

DENTON BROADCAST

DETAILS

Project number	17-10610
Date	01/31/18
Drawn by	KDR
Checked by	ZG

C04

Scale

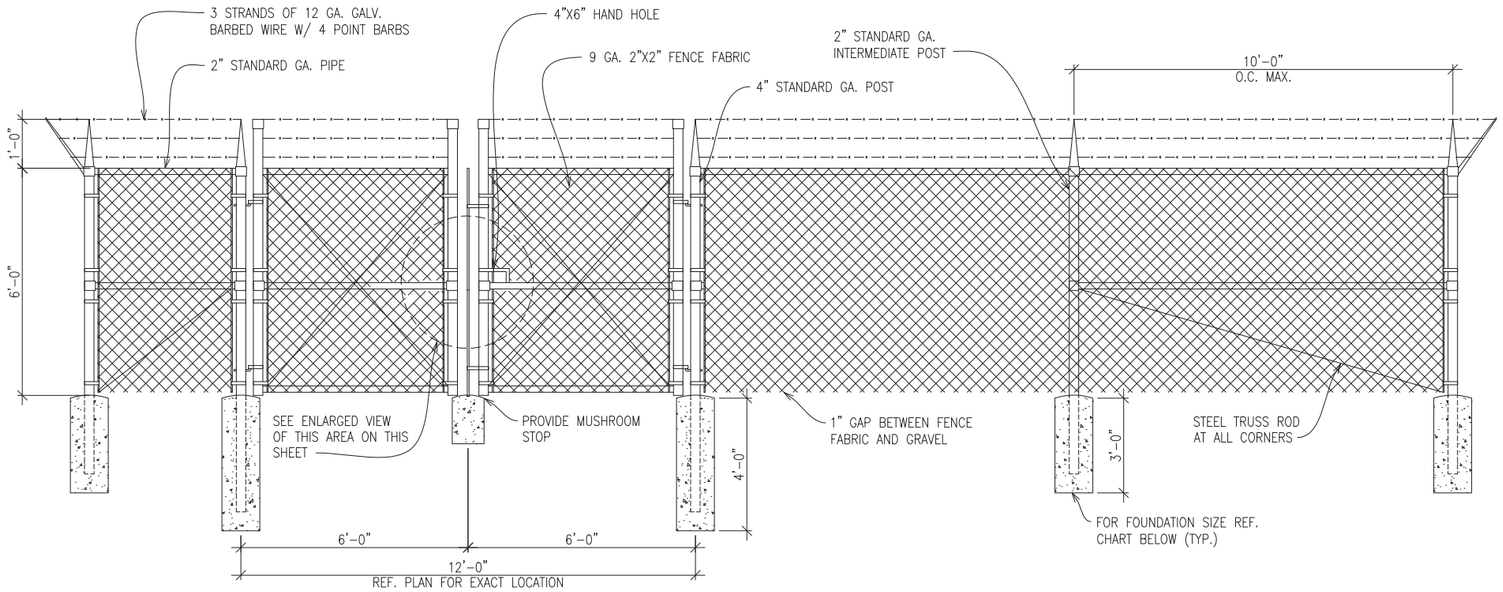

1 CHAIN LINK FENCE DETAIL
SCALE: NTS

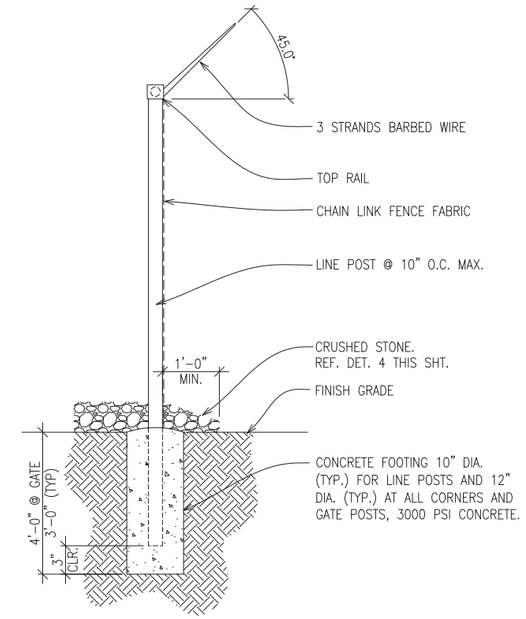

2 FENCE POST DETAIL
SCALE: NTS

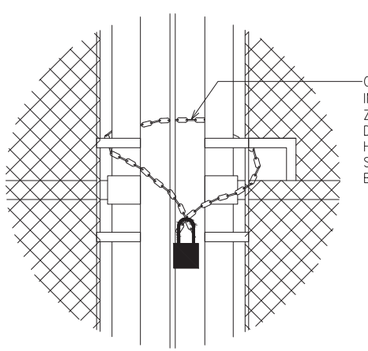

CHAIN LINK FENCE TABLE

COMPONENT	DIMENSIONS	HARDWARE AND FEATURES
FABRIC	6' HIGH, 9 GA., 2" ZINC COATED MESH	SELVEDGE TOP AND BOTTOM
WIRE	BARBED WIRE WITH 4 BARBS	3 RUNS
EXTENSION ARMS	STAMPED STEEL WITH MALLEABLE IRON BASE	45 DEGREE, ANGLED OUTWARD
ALL POSTS SHALL BE SCHEDULE 40 HOT DIPPED GALVANIZED PIPE		
END AND CORNER POSTS	3" STD. GA. PIPE (SCH 40)	36" (DEPTH) X 12" (DIAMETER) CONCRETE FOOTING
LINE POSTS	2" STD. GA. PIPE (SCH 40)	36" (DEPTH) X 10" (DIAMETER) CONCRETE FOOTING
DRIVEWAY GATE POSTS	4" STD. GA. PIPE (SCH 40)	48" (DEPTH) X 12" (DIAMETER) CONCRETE FOOTING
WALKWAY GATE POSTS	3" STD. GA. PIPE (SCH 40)	36" (DEPTH) X 12" (DIAMETER) CONCRETE FOOTING
TOP RAILS	1 1/2" STD. GA. PIPE (SCH 40)	ATTACHED WITH PROPER FITTING
MID RAILS	1 1/2" STD. GA. PIPE (SCH 40)	ATTACHED WITH PROPER FITTING
BRACE RODS	3/8" STEEL TRUSS	ATTACHED WITH PROPER FITTING
BOTTOM TENSION WIRE	7 GA. 1900 LB. TENSILE STRENGTH	ALL SIDES
TENSION BARS	3/16" X 3/4" FULL HEIGHT OF FABRIC	SPACE TENSION BANDS 15"± O.C.
TENSION WIRE	9 GA. ALUMINUM	12" O.C. FOR LINE POSTS AND GATES 24" O.C. FOR RAILS AND TENSION WIRE
GATE FRAME	2" STD. GA. PIPE (SCH 40)	WELDED ASSEMBLY, COLD GA. AND SILVER PAINT WELDED AREAS
POST CAPS	PER POST DIAMETER	ALL POSTS
POST, RAIL AND GATE FITTINGS	AS REQUIRED	STAMPED STEEL OR MALLEABLE CASTING
GATE HINGES	AS REQUIRED	OFFSET TYPE W/ 180° SWING
DOUBLE GATE LATCH	AS REQUIRED	DUCKBILL LATCH ON ACTIVE LEAF, DROP BOLTS ON BOTH LEAFS
GATE STOPS (CLOSED POSITION)	AS REQUIRED	MUSHROOM STOP SET IN CONCRETE
GATE STOPS (OPEN POSITION)	AS REQUIRED	AS REQUIRED

CLASS 7 GRADIATION SCHEDULE	
SIEVE SIZE	% PASSING
1 1/2"	100
1"	60–100
3/4"	50–90
3/8"	–
#4	25–55
#10	–
#40	10–30
#200	3–10

NOTE:
MINIMUM STONE THICKNESS SHALL BE 4" OF CLASS 7 OR OTHER APPROVED MATERAIL. (SEE GRADIATION SCHEDULE THIS SHEET)

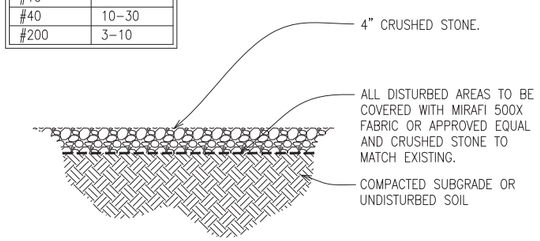

3 GEOTEXTILE FABRIC DETAIL
SCALE: NTS

CELERIS GROUP
Celeris Group Consulting Engineers
2000 E. Lamar Blvd., Suite 550
Arlington, TX 76006
Phone: 817-446-1700
Fax: 817-460-0677
www.celerisgroup.com

Engineer:
Celeris Group Consulting Engineers
2000 E. Lamar Blvd., Suite 550
Arlington, TX 76006
Phone: 817-446-1700
Fax: 817-460-0677
Registration No: F-13992

Electrical Engineer:
Torres Engineering Services, Inc.
8237 Delafield Dr.
Ft. Worth, TX 76131
Phone: 682-556-0848
Registration No: F-10147

STAMP:
STATE OF TEXAS
ZHENJING GUO
84667
LICENSED PROFESSIONAL ENGINEER
1/30/2018

No.	Description	Date
0	ISSUED FOR CONSTRUCTION	01/31/18

AMERICAN TOWER CORPORATION

ATC SITE # 89137

DENTON BROADCAST

DETAILS

Project number	17-10610
Date	01/31/18
Drawn by	KDR
Checked by	ZG

C05

Scale

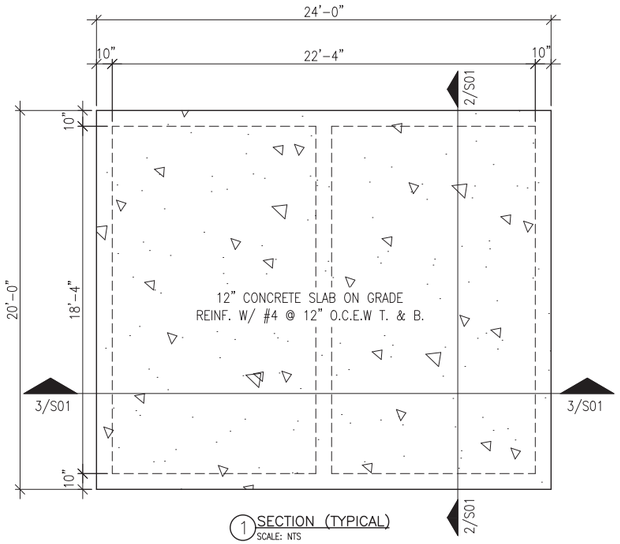

1 SECTION (TYPICAL)
SCALE: NTS

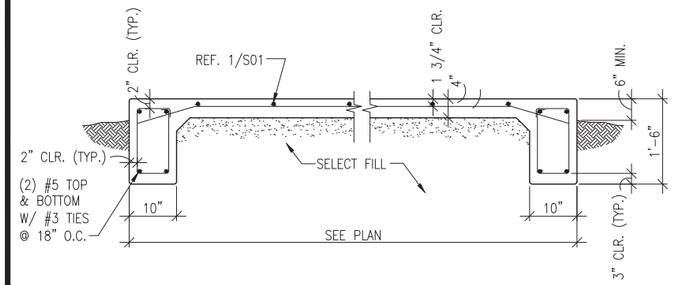

2 SECTION (TYPICAL)
SCALE: NTS

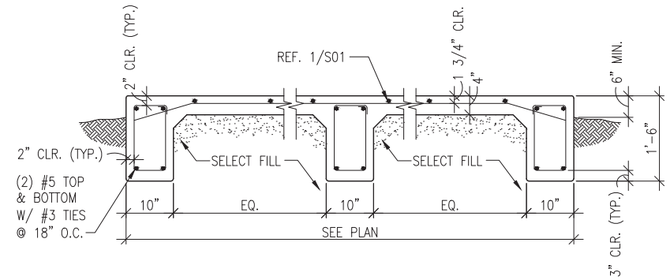

3 SECTION (TYPICAL)
SCALE: NTS

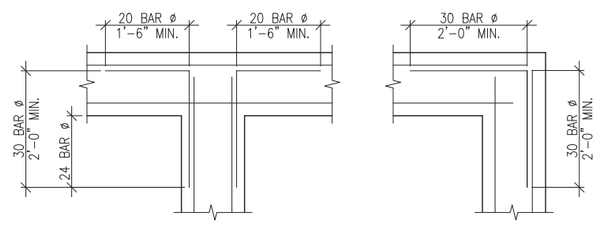

4 CORNER BAR DETAIL (TYPICAL)
SCALE: NTS

FOUNDATIONS:

F1. SLABS ON GRADE HAVE BEEN DESIGNED IN ACCORDANCE WITH LATEST ACI BUILDING CODE (ACI318 AND AT&T NATIONAL STANDARDS)

F2. THE EXISTING GROUND SURFACE BENEATH THE BUILDING SLAB SHALL BE EXCAVATED AND REPLACED WITH A MINIMUM OF 2'-0" OF WELL COMPACTED INACTIVE FILL. THE INACTIVE FILL SHALL HAVE A PLASTICITY INDEX (P.I.) BETWEEN 3 AND 12, A MAXIMUM LIQUID LIMIT OF 30, AND SHALL BE COMPACTED IN LIFTS NOT TO EXCEED 8" IN THICKNESS TO A DENSITY NOT LESS THAN 95% OF STANDARD PROCTOR DENSITY AT OR ABOVE THE OPTIMUM MOISTURE CONTENT.

F3. PRIOR TO PLACEMENT OF SELECT FILL, THE TOP 6" OF THE UNDERLYING CLAY SOILS SHALL BE SCARIFIED AND REWORKED TO A MINIMUM OF 4% ABOVE OPTIMUM MOISTURE CONTENT, AND RECOMPACTED TO A MINIMUM OF 95% OF STANDARD PROCTOR DENSITY.

CONCRETE:

C1. CONCRETE WORK SHALL BE EXECUTED IN STRICT ACCORDANCE WITH THE LATEST AMERICAN CONCRETE INSTITUTE BUILDING CODE (ACI 318).

C2. CONCRETE SPECIFICATIONS SHALL BE AS FOLLOWS:
28 DAY STRENGTH = 4,000 PSI
AGGREGATE = H.R.
SLUMP = 3"-5"

C3. FIELD VERIFY WITH OWNER THE LOCATION OF ALL CAST-IN-PLACE ACCESSORIES, ETC., PRIOR TO CONSTRUCTION.

C4. JOB SITE CONDITIONS SHALL BE VERIFIED BY THE CONTRACTOR PRIOR TO THE FABRICATION OF MATERIALS.

REINFORCEMENT:

R1. ALL REINFORCEMENT SHALL CONFORM TO THE ASTM A-615 GRADE 60.

R2. REINFORCING STEEL SHALL BE DESIGNED, DETAILED, FABRICATED AND PLACED IN ACCORDANCE WITH THE LATEST ACI DETAILING MANUAL (SP-66) AND CRSI MANUAL OF STANDARD PRACTICE.

SITE CONDITIONS:

S1 CONTRACTOR SHALL FIELD VERIFY THE LOCATION OF ALL UNDERGROUND SITE UTILITIES AND SHALL NOTIFY ENGINEER OF ANY POTENTIAL CONFLICTS WITH THE NEW CONSTRUCTION.

CELERIS GROUP

Celeris Group Consulting Engineers
2000 E. Lamar Blvd., Suite 550
Arlington, TX 76006
Phone: 817-446-1700
Fax: 817-460-0677
www.celerisgroup.com

Engineer:
Celeris Group Consulting Engineers
2000 E. Lamar Blvd., Suite 550
Arlington, TX 76006
Phone: 817-446-1700
Fax: 817-460-0677
Registration No: F-13992

Electrical Engineer:
Torres Engineering Services, Inc.
8237 Delafield Dr.
Ft. Worth, TX 76131
Phone: 682-556-0848
Registration No: F-10147

STAMP:

1/30/2018

No.	Description	Date
0	ISSUED FOR CONSTRUCTION	01/31/18

AMERICAN TOWER CORPORATION

ATC SITE # 89137

DENTON BROADCAST

FOUNDATION PLAN

Project number	17-10610
Date	01/31/18
Drawn by	KDR
Checked by	ZG

S01

Scale

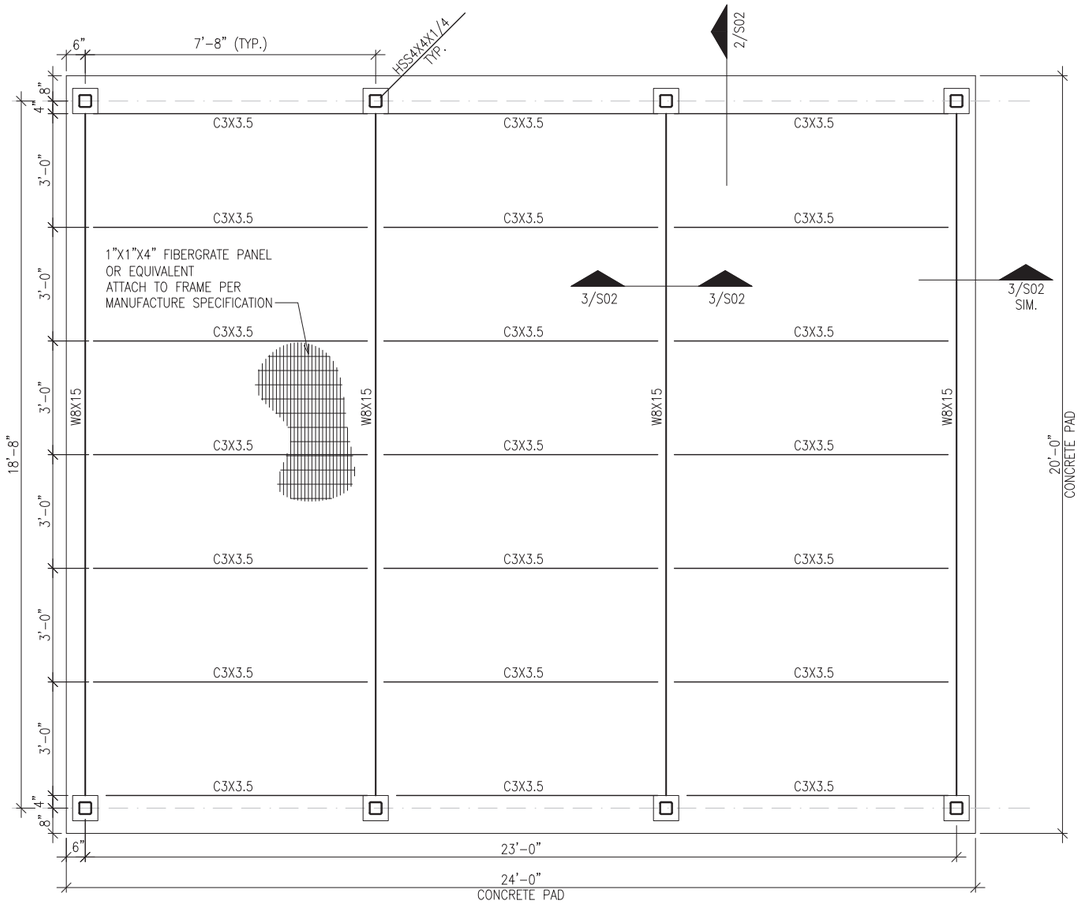

1 CANOPY FRAMING PLAN
SCALE: (34" X 22") 3/16"=1'-0"
SCALE: (17" X 11") 3/32"=1'-0"

BUILDING CODE: 2015 IBC

DESIGN LOADS:

WIND LOADS:	WIND SPEED 2015 IBC) 115 MPH,	EXPOSURE CATEGORY B
LIVE LOADS:	ELEVATED PLATFORM	20 PSF
ICE LOADS:		3/4" ICE

STRUCTURAL STEEL:

1. ALL WIDE-FLANGE BEAMS SHALL BE ASTM A-992 (FY=50 KSI), ALL TUBE COLUMNS SHALL BE ASTM A-500, GRADE B, ALL OTHER STEEL SHALL BE ASTM A-36.
2. STRUCTURAL STEEL SHALL BE DETAILED, FABRICATED, AND ERECTED IN ACCORDANCE WITH ASIC SPECIFICATIONS.
3. ALL SHOP AND FIELD WELDING SHALL BE EXECUTED BY CERTIFIED WELDERS IN ACCORDANCE WITH THE LATEST EDITION OF THE AMERICAN WELDING SOCIETY SPECIFICATIONS.
4. SHOP CONNECTIONS SHALL BE WELDED UNLESS NOTED OTHERWISE. FIELD CONNECTIONS SHALL BE AS INDICATED ON THE DRAWINGS.
5. ALL ERECTION BOLTS SHALL BE ASTM A-307. ALL PERMANENT BOLTS SHALL BE ASTM A-325.
6. DESIGN OF CONNECTIONS SHALL BE PERFORMED BY THE FABRICATOR UNDER THE SUPERVISION OF A REGISTERED ENGINEER. CONNECTIONS SHALL CONFORM TO AISC SPECIFICATIONS, AND SHALL BE CAPABLE OF SUPPORTING 55% OF THE MAXIMUM LOAD OF THE MEMBER FOR THE SPAN SHOWN AND THE MATERIAL SPECIFIED IN THE AISC HANDBOOK, NINTH EDITION.
7. ALL WELDS SHALL BE PERFORMED USING E70 ELECTRODES. ALL FILLET WELDS SHALL BE ¼" UNLESS OTHERWISE NOTED.
8. ALL STRUCTURAL STEEL SHALL BE HOT-DIPPED GALVANIZED.

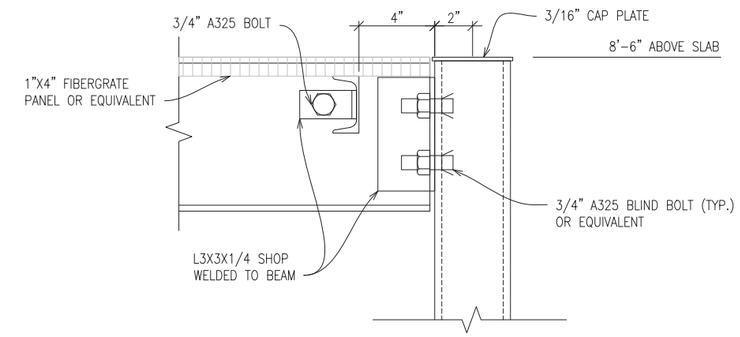

2 CONNECTION DETAIL
SCALE: (34" X 22") 3"=1'-0"
SCALE: (17" X 11") 1-1/2"=1'-0"

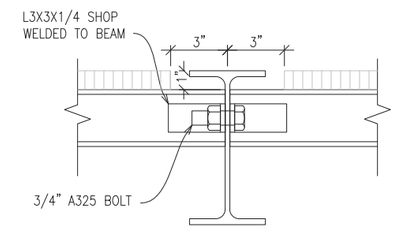

3 CONNECTION DETAIL
SCALE: (34" X 22") 3"=1'-0"
SCALE: (17" X 11") 1-1/2"=1'-0"

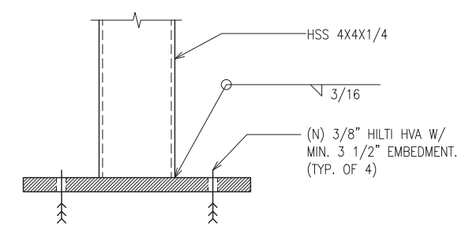

ELEVATION

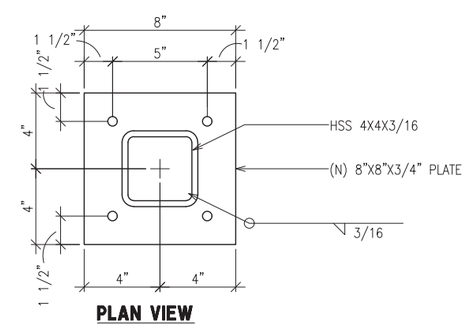

PLAN VIEW

4 BASE PLATE DETAIL
SCALE: NTS

CELERIS GROUP

Celeris Group Consulting Engineers
2000 E. Lamar Blvd., Suite 550
Arlington, TX 76006
Phone: 817-446-1700
Fax: 817-460-0677
www.celerisgroup.com

Engineer:
Celeris Group Consulting Engineers
2000 E. Lamar Blvd., Suite 550
Arlington, TX 76006
Phone: 817-446-1700
Fax: 817-460-0677
Registration No: F-13992

Electrical Engineer:
Torres Engineering Services, Inc.
8237 Delafield Dr.
Ft. Worth, TX 76131
Phone: 682-556-0848
Registration No: F-10147

STAMP:

No.	Description	Date
0	ISSUED FOR CONSTRUCTION	01/31/18

AMERICAN TOWER CORPORATION

ATC SITE # 89137

DENTON BROADCAST

ICE SHIELD DETAILS

Project number	17-10610
Date	01/31/18
Drawn by	KDR
Checked by	ZG

S2.0

Scale

NOTE:
1. ROUTE CONDUITS 36" FROM OBSTRUCTIONS

2. HAND EXCAVATE WHERE EXISTING UNDERGROUND SERVICES EXIST.

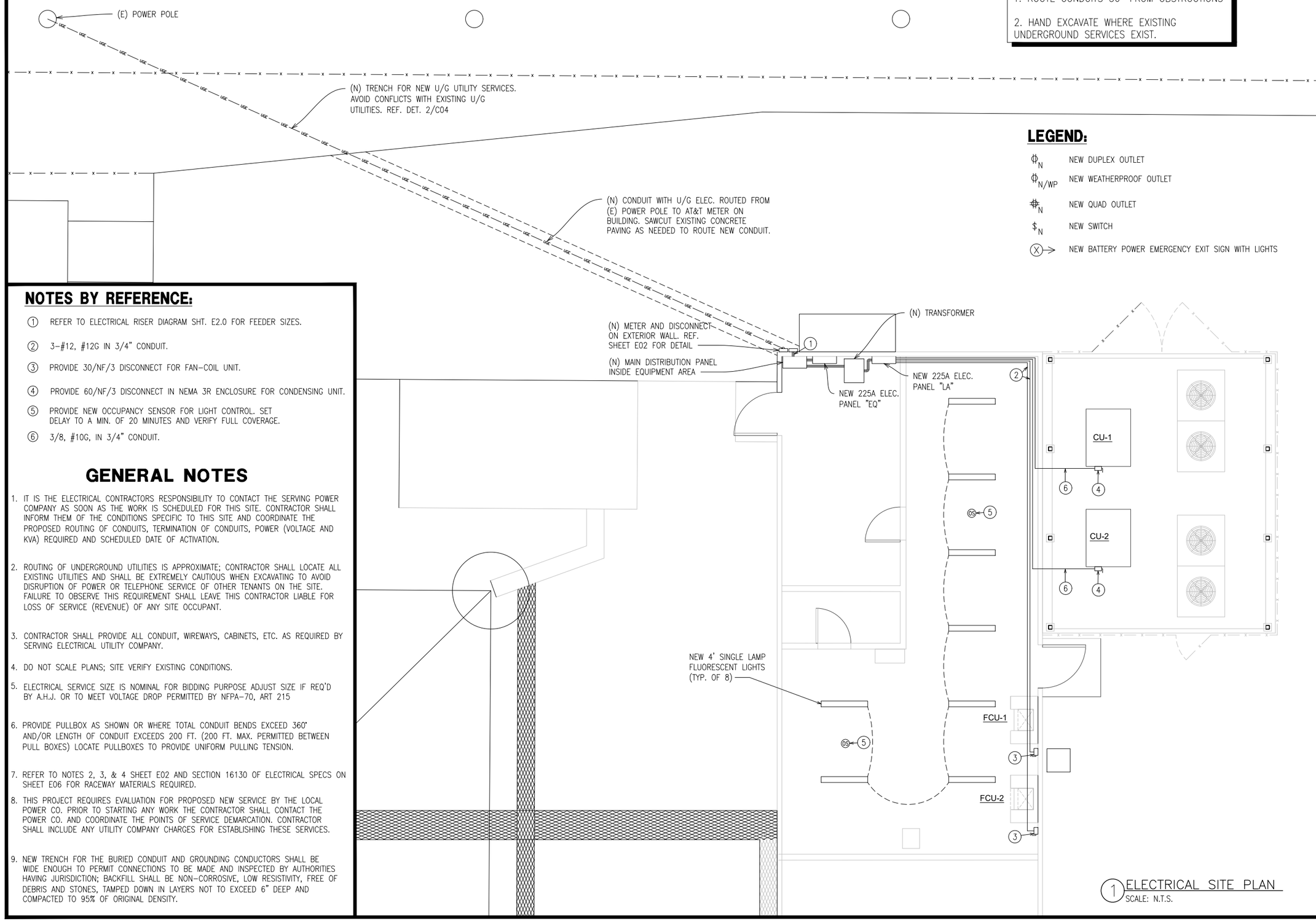

1 ELECTRICAL SITE PLAN
SCALE: N.T.S.

LEGEND:

- ϕ_N NEW DUPLEX OUTLET
- $\phi_{N/WP}$ NEW WEATHERPROOF OUTLET
- Φ_N NEW QUAD OUTLET
- $\$_N$ NEW SWITCH
- (X)→ NEW BATTERY POWER EMERGENCY EXIT SIGN WITH LIGHTS

NOTES BY REFERENCE:

1. REFER TO ELECTRICAL RISER DIAGRAM SHT. E2.0 FOR FEEDER SIZES.
2. 3-#12, #12G IN 3/4" CONDUIT.
3. PROVIDE 30/NF/3 DISCONNECT FOR FAN-COIL UNIT.
4. PROVIDE 60/NF/3 DISCONNECT IN NEMA 3R ENCLOSURE FOR CONDENSING UNIT.
5. PROVIDE NEW OCCUPANCY SENSOR FOR LIGHT CONTROL. SET DELAY TO A MIN. OF 20 MINUTES AND VERIFY FULL COVERAGE.
6. 3/8, #10G, IN 3/4" CONDUIT.

GENERAL NOTES

1. IT IS THE ELECTRICAL CONTRACTORS RESPONSIBILITY TO CONTACT THE SERVING POWER COMPANY AS SOON AS THE WORK IS SCHEDULED FOR THIS SITE. CONTRACTOR SHALL INFORM THEM OF THE CONDITIONS SPECIFIC TO THIS SITE AND COORDINATE THE PROPOSED ROUTING OF CONDUITS, TERMINATION OF CONDUITS, POWER (VOLTAGE AND KVA) REQUIRED AND SCHEDULED DATE OF ACTIVATION.
2. ROUTING OF UNDERGROUND UTILITIES IS APPROXIMATE; CONTRACTOR SHALL LOCATE ALL EXISTING UTILITIES AND SHALL BE EXTREMELY CAUTIOUS WHEN EXCAVATING TO AVOID DISRUPTION OF POWER OR TELEPHONE SERVICE OF OTHER TENANTS ON THE SITE. FAILURE TO OBSERVE THIS REQUIREMENT SHALL LEAVE THIS CONTRACTOR LIABLE FOR LOSS OF SERVICE (REVENUE) OF ANY SITE OCCUPANT.
3. CONTRACTOR SHALL PROVIDE ALL CONDUIT, WIREWAYS, CABINETS, ETC. AS REQUIRED BY SERVING ELECTRICAL UTILITY COMPANY.
4. DO NOT SCALE PLANS; SITE VERIFY EXISTING CONDITIONS.
5. ELECTRICAL SERVICE SIZE IS NOMINAL FOR BIDDING PURPOSE ADJUST SIZE IF REQ'D BY A.H.J. OR TO MEET VOLTAGE DROP PERMITTED BY NFPA-70, ART 215
6. PROVIDE PULLBOX AS SHOWN OR WHERE TOTAL CONDUIT BENDS EXCEED 360° AND/OR LENGTH OF CONDUIT EXCEEDS 200 FT. (200 FT. MAX. PERMITTED BETWEEN PULL BOXES) LOCATE PULLBOXES TO PROVIDE UNIFORM PULLING TENSION.
7. REFER TO NOTES 2, 3, & 4 SHEET E02 AND SECTION 16130 OF ELECTRICAL SPECS ON SHEET E06 FOR RACEWAY MATERIALS REQUIRED.
8. THIS PROJECT REQUIRES EVALUATION FOR PROPOSED NEW SERVICE BY THE LOCAL POWER CO. PRIOR TO STARTING ANY WORK THE CONTRACTOR SHALL CONTACT THE POWER CO. AND COORDINATE THE POINTS OF SERVICE DEMARCATION. CONTRACTOR SHALL INCLUDE ANY UTILITY COMPANY CHARGES FOR ESTABLISHING THESE SERVICES.
9. NEW TRENCH FOR THE BURIED CONDUIT AND GROUNDING CONDUCTORS SHALL BE WIDE ENOUGH TO PERMIT CONNECTIONS TO BE MADE AND INSPECTED BY AUTHORITIES HAVING JURISDICTION; BACKFILL SHALL BE NON-CORROSIVE, LOW RESISTIVITY, FREE OF DEBRIS AND STONES, TAMPED DOWN IN LAYERS NOT TO EXCEED 6" DEEP AND COMPACTED TO 95% OF ORIGINAL DENSITY.

CELERIS GROUP

Celeris Group Consulting Engineers
2000 E. Lamar Blvd., Suite 550
Arlington, TX 76006
Phone: 817-446-1700
Fax: 817-460-0677
www.celerisgroup.com

Engineer:
Celeris Group Consulting Engineers
2000 E. Lamar Blvd., Suite 550
Arlington, TX 76006
Phone: 817-446-1700
Fax: 817-460-0677
Registration No: F-13992

Electrical Engineer:
Torres Engineering Services, Inc.
8237 Delafield Dr.
Ft. Worth, TX 76131
Phone: 682-556-0848
Registration No: F-10147

STAMP:

STATE OF TEXAS
ROBERTO TORRES
83419
LICENSED PROFESSIONAL ENGINEER

1/31/18

No.	Description	Date
0	ISSUED FOR CONSTRUCTION	01/31/18

AMERICAN TOWER CORPORATION

ATC SITE # 89137

DENTON BROADCAST

ELECTRICAL SITE PLAN

Project number	17-10610
Date	01/31/18
Drawn by	KDR
Checked by	ZG

E01

Scale

NOTES: BY REFERENCE

1. PROVIDE 3#600, 1#2G TYPE THWN IN 3" CONDUIT (IMC ABOVE GRADE, SCHED. 40 PVC BELOW GRADE).
2. NEW 400A MCB 277/480V, 3P, 4W PANEL "MP"
3. REFER TO GROUND ROD WITH ACCESS AREA DETAIL 2/E04.
4. 5/8" DIAMETER X 10' COPPER CLAD GROUND RODS. DRIVE TOP TO 18" BELOW SURFACE. INSTALL GROUND ROD INSPECTION PORT (RE: 2/E04).
5. GROUNDING ELECTRODE CONDUCTOR (#1/0 CU) IN 1" PROTECTIVE CONDUIT.
6. NEW 400A 3ø,4W NEMA 3R DEMAND METER BY ELECTRICAL CONTRACTOR.
7. NEW 400A SERVICE ENTRANCE RATED FUSED 1ø3W 480V DISCONNECT SWITCH IN NEMA 3R ENCLOSURE WITH COPPER SOLID NEUTRAL AND GROUNDING BAR.
8. NEW SQUARE D AMP MCB 120/208V 3P 4W NQOD 42SP PANEL BOARD "EQ" W/ MAIN CIRCUIT BREAKER.
9. NEW SQUARE D 225 AMP MCB 120/208V 3P 4W NQOD 42SP PANEL BOARD "LA" W/ MAIN CIRCUIT BREAKER.
10. NEW 225 KVA TRANSFORMER 480V DELTA PRIMARY, 120/208V WYE SECONDARY, 3PH, 4W
11. PROVIDE 3#1/0, #6G, CONDUCTORS IN 2" CONDUIT
12. PROVIDE 4#4/0, #4G CONDUCTORS IN 2" CONDUIT
13. PROVIDE 4#4/0, #4G CONDUCTORS IN 2" CONDUIT
14. PROVIDE 3#600 TYPE THWN CONDUCTORS IN 3" CONDUIT

DENTON

PANEL LOCATION:		MP	MAIN SIZE & TYPE:	400 A MCB
NEMA TYPE	3R			
INTERRUPTING RATING (AIC)	Match Avail.		VOLTAGE:	277/480/3PH/4W

CKT	T	SERVES	AMPS / POLES	LOAD (VA)	PHASE LOAD (VA) A	B	C	LOAD (VA)	AMPS / POLES	SERVES	T	CKT
1	G	TRANSFORMER TA	125/3	25000	77200			52200	225/3	PANEL EQ	G	2
3	G	--	--	25000		77200		52200	--	--	G	4
5	G	--	--	25000			77200	52200	--	--	G	6
7		SPACE								SPACE		8
9		SPACE								SPACE		10
11		SPACE								SPACE		12
13		SPACE								SPACE		14
15		SPACE								SPACE		16
17		SPACE								SPACE		18
				TOTAL	77200	77200	77200					
				TOTAL LOAD (KVA)			232					
				TOTAL LOAD (AMPS)			279					

DENTON

PANEL LOCATION:		LA	MAIN SIZE & TYPE:	225 A MCB
NEMA TYPE	3R			
INTERRUPTING RATING (AIC)	10K		VOLTAGE:	120/208/3PH/4W

CKT	T	SERVES	AMPS / POLES	LOAD (VA)	PHASE LOAD (VA) A	B	C	LOAD (VA)	AMPS / POLES	SERVES	T	CKT
1	C	A/C UNIT	70/3	7000	7500			500	20/1	PUMP CONTROLS	G	2
3	C	--	--	7000		7500		500	20/1	RF SWITCHES	G	4
5	C	--	--	7000			7500	500	20/1	RF SWITCH CONTROLLER	G	6
7	C	A/C UNIT	70/3	7000	7500			500	20/1	RF FILTER BLOWERS	G	8
9	C	--	--	7000		8000		1000	20/1	EQUIPMENT RACK	G	10
11	C	--	--	7000			7000					12
13	L	ROOM LIGHTS	20/1	1200	1200							14
15	R	RECEPTACLES	20/1	540		540						16
17	R	RECEPTACLES	20/1	540			540					18
19												20
21												22
23												24
25												26
27												28
29												30
31												32
33												34
35												36
37												38
39												40
41												42
				TOTAL	16200	16040	15040					
				TOTAL LOAD (KVA)			47					
				TOTAL LOAD (AMPS)			131					

DENTON

PANEL LOCATION:		EQ	MAIN SIZE & TYPE:	225 A MCB
NEMA TYPE	3R			
INTERRUPTING RATING (AIC)	Match Avail.		VOLTAGE:	277/480/3PH/4W

CKT	T	SERVES	AMPS / POLES	LOAD (VA)	PHASE LOAD (VA) A	B	C	LOAD (VA)	AMPS / POLES	SERVES	T	CKT
1	G	PARALLAX TRANSMITTER	80/3	15000	15700			700	20/3	STANDBY PUMP	G	2
3	G	--	--	15000		15700		700	--	--	G	4
5	G	--	--	15000			15700	700	--	--	G	6
7	G	HEAT EXCHANGER	20/3	1000	1700			700	20/3	STANDBY PUMP	G	8
9	G	--	--	1000		1700		700	--	--	G	10
11	G	--	--	1000			1700	700	--	--	G	12
13	G	MAIN PUMP	20/3	700	15700			15000		PARALLAX TRANSMITTER	G	14
15	G	--	--	700		15700		15000		--	G	16
17	G	--	--	700			15700	15000		--	G	18
19	G	PARALLAX TRANSMITTER	80/3	15000	18000			1000		HEAT EXCHANGER	G	20
21	G	--	--	15000		16000		1000		--	G	22
23	G	--	--	15000			18000	1000		--	G	24
25	G	HEAT EXCHANGER	20/3	1000	1700			700		MAIN PUMP	G	26
27	G	--	--	1000		1700		700		--	G	28
29	G	--	--	1000			1700	700		--	G	30
31	G	MAIN PUMP	20/3	700	1400			700		STANDBY PUMP	G	32
33	G	--	--	700		1400		700		--	G	34
35	G	--	--	700			1400	700		--	G	36
37		SPACE								SPACE		38
39		SPACE								SPACE		40
41		SPACE								SPACE		42
				TOTAL	52200	52200	52200					
				TOTAL LOAD (KVA)			157					
				TOTAL LOAD (AMPS)			188					

SYMBOLS LIST AND ABBREVIATIONS

	DIRECT BURIED BARE GROUND WIRE		
	UNDERGROUND ELECTRICAL CONDUIT AND FEEDER		
	UNDERGROUND TELEPHONE CO. CONDUIT TO TELCO DEMARK POINT		
	GROUNDING RING		
	CONNECTION (CADWELD OR EXOTHERMIC WELD TO STRUCTURE OR DEVICE		
	GROUNDING PORT, SEE DETAIL 2 SHEET E04		GROUND POINT SEE GROUNDING PLAN
	CONNECTION TO GROUND RING OR GROUND ROD. EXOTHERMIC WELD OR AS REQUIRED BY AUTHORITY HAVING JURISDICTION		
	PULL BOX NOMINAL 24"x24"x36" DEEP (WITH TRAFFIC LID WHERE VEHICULAR TRAFFIC IS LIKELY)		
X|||	INDICATES 2 HOT, 1 NEUTRAL, & 1 GROUND IN CONDUIT		
A.H.J.	AUTHORITY HAVING JURISDICTION		
CM	CONSTRUCTION MANAGER OR AGENT FOR TILLMAN INFRASTRUCTURE		

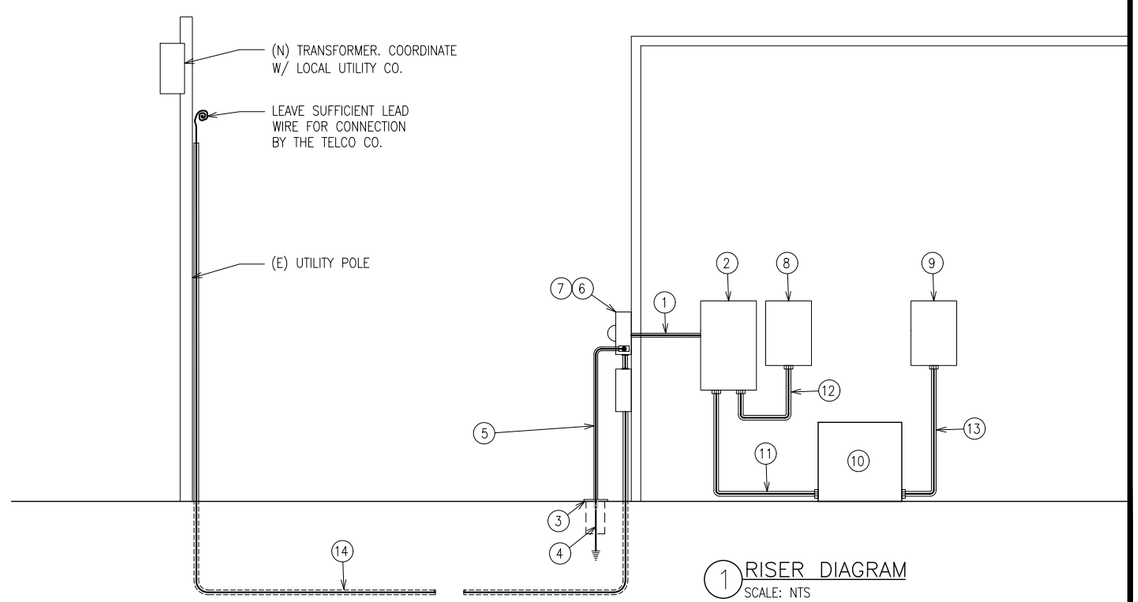

1 RISER DIAGRAM
SCALE: NTS

CELERIS GROUP

Celeris Group Consulting Engineers
2000 E. Lamar Blvd., Suite 550
Arlington, TX 76006
Phone: 817-446-1700
Fax: 817-460-0677
www.celerisgroup.com

Engineer:
Celeris Group Consulting Engineers
2000 E. Lamar Blvd., Suite 550
Arlington, TX 76006
Phone: 817-446-1700
Fax: 817-460-0677
Registration No: F-13992

Electrical Engineer:
Torres Engineering Services, Inc.
8237 Delafield Dr.
Ft. Worth, TX 76131
Phone: 682-556-0848
Registration No: F-10147

STAMP:

STATE OF TEXAS
ROBERTO TORRES
83419
LICENSED PROFESSIONAL ENGINEER

1/31/18

No.	Description	Date
0	ISSUED FOR CONSTRUCTION	01/31/18

AMERICAN TOWER CORPORATION

ATC SITE # 89137

DENTON BROADCAST

ELECTRICAL RISER DIAGRAM

Project number	17-10610
Date	01/31/18
Drawn by	KDR
Checked by	ZG

E02

Scale

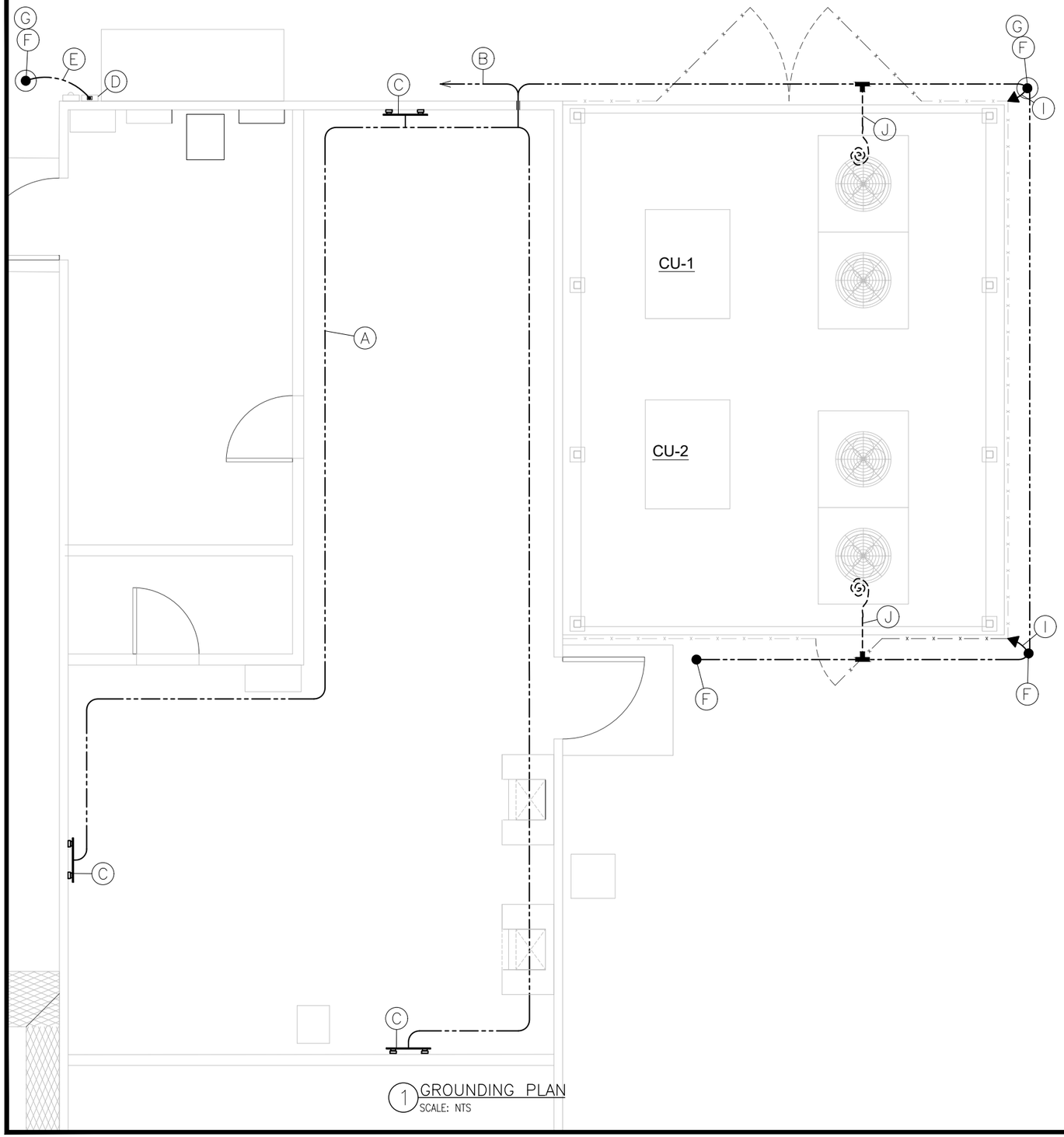

1 GROUNDING PLAN
SCALE: NTS

NOTES: REFERENCED TO GROUNDING PLAN

(A) #4G TELCO-FLEX, GROUND WIRE

(B) 1/0 GROUND WIRE SOLIDLY CONNECTED (CAD WELD OR AS DIRECTED BY AT&T). ROUTE FROM GROUND BAR LOCATION AT EQUIPMENT ROOM TO MAIN BUILDING GROUND BUS AT EXISTING ELEC. ROOM IN 2" RIGID STEEL CONDUIT.

(C) NEW GROUND BAR MOUNTED TO WALL. VERIFY EXACT LOCATION WITH AT&T CONSTRUCTION MANAGER. GROUND BAR TO BE 30" x 4" x 1/4" PRE-DRILLED COPPER BUS BAR.

(D) 1# 1/0 GEC (GROUNDING ELECTRODE CONDUCTOR) DOWN IN 3/4" CONDUIT TO 10' GROUND ROD. CONNECT WITH MECHANICAL COUPLING IN GROUND INSPECTION PORT OR AS DIRECTED BY CODE ENFORCEMENT AUTHORITY HAVING JURISDICTION.

(E) NEW MULTI-GANG METER "PAK". REF. ELEC. RISER ON SHT. E02.0

(F) 5/8" DIAMETER X 10' COPPER CLAD GROUND ROD. DRIVE TO 18" BELOW SURFACE. REFER TO 3/E04. WHERE LOCATED AT GROUND RING EVENLY SPACE GROUND RODS SIMILAR TO THAT SHOWN BELOW BUT TYPICALLY TWICE THE GROUND ROD LENGTH BUT NO MORE THAN 1 1/2" THAT LENGTH.

(G) REFER TO GROUND ROD WITH ACCESS AREA DETAIL 2/E04.

(I) #2 AWG SOLID TINNED COPPER GROUND WIRE 18" BELOW GRADE FOR CONNECTION TO FENCE POSTS.

(J) #2 TINNED COPPER GROUND WIRE 18" BELOW GRADE. PROVIDE SIGNIFICANT LEAD TO EQUIPMENT CABINETS

CELERIS GROUP

Celeris Group Consulting Engineers
2000 E. Lamar Blvd., Suite 550
Arlington, TX 76006
Phone: 817-446-1700
Fax: 817-460-0677
www.celerisgroup.com

Engineer:
Celeris Group Consulting Engineers
2000 E. Lamar Blvd., Suite 550
Arlington, TX 76006
Phone: 817-446-1700
Fax: 817-460-0677
Registration No: F-13992

Electrical Engineer:
Torres Engineering Services, Inc.
8237 Delafield Dr.
Ft. Worth, TX 76131
Phone: 682-556-0848
Registration No: F-10147

STAMP:

STATE OF TEXAS
ROBERTO TORRES
83419
LICENSED
PROFESSIONAL ENGINEER

1/31/18

No.	Description	Date
0	ISSUED FOR CONSTRUCTION	01/31/18

AMERICAN TOWER CORPORATION

ATC SITE #
89137

DENTON
BROADCAST

ELECTRICAL GROUNDING PLAN

Project number	17-10610
Date	01/31/18
Drawn by	KDR
Checked by	ZG

E03

Scale

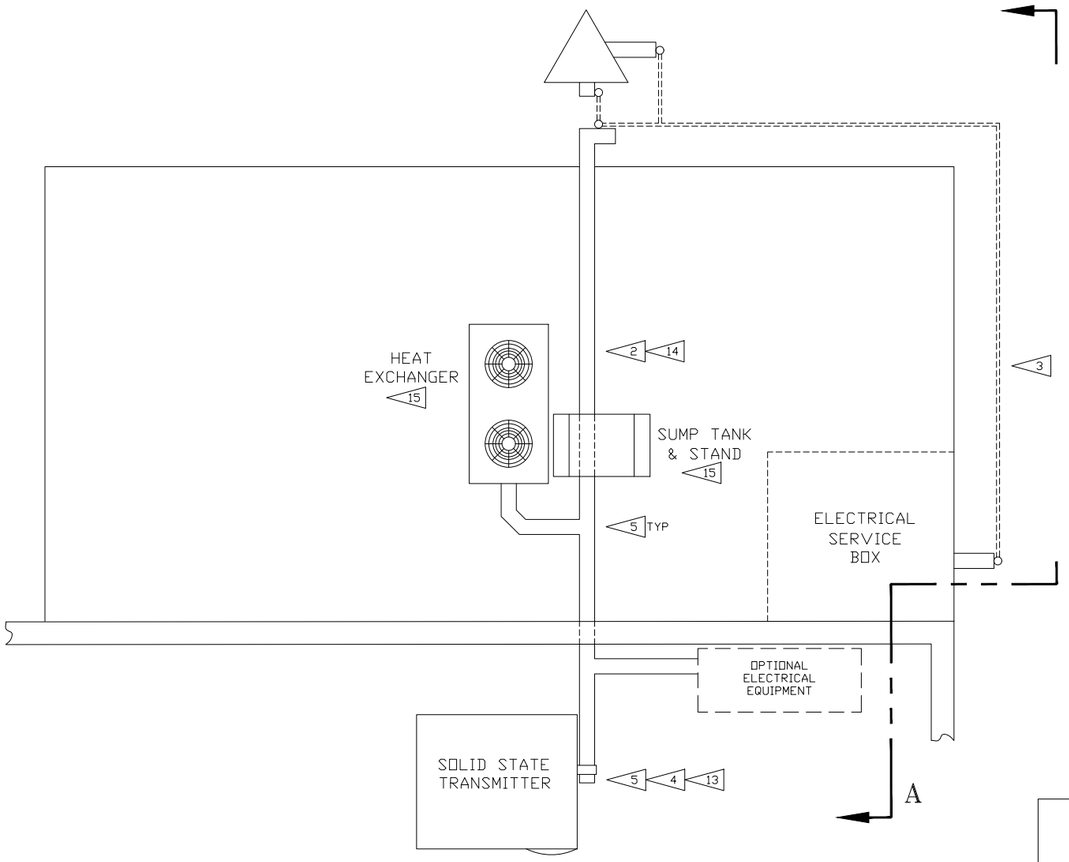

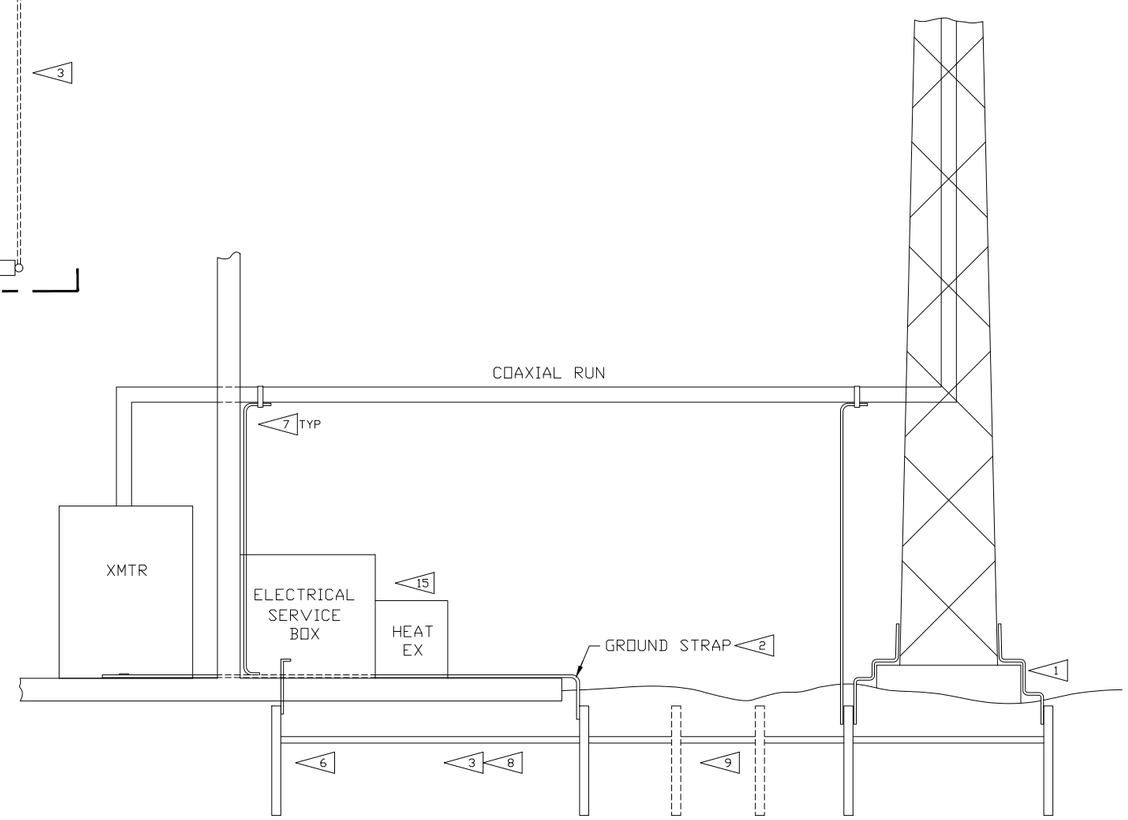

VIEW @ A–A
ROTATED 90° CW

NOTES:

1. TOWER GROUNDING PROVIDED BY TOWER MFG. OR RIGGING CREW. TYPICAL INSTALLATION SHOULD CONFORM TO EIA RS-222-C STD.
2. MATERIAL IS 4" WIDE COPPER STRAP .03-.06 THK. MECHANICAL CONNECTION IS TO BE MADE TO ALL EQUIPMENT WITH A MINIMUM RUN OF STRAP MATERIAL.
3. COUNTER POISE SYSTEM TIES TOGETHER VARIOUS GROUND RODS. MATERIAL IS 10AWG BARE COPPER WIRE BURIED WITH GROUND ROD 6" BELOW SOIL SURFACE. GOOD MECHANICAL CONNECTION IS REQUIRED BETWEEN WIRE AND GROUND ROD. USE GROUNDING GRID CONNECTORS THAT MEET NEC 250.
4. ALL MATERIALS TO BE SUPPLIED BY CONTRACTOR INCLUDING COPPER STRAP TO CONNECT COOLING SYSTEM EQUIPMENT TO TRANSMITTER.
5. JOINTS SHALL BE OVERLAPPED AND BOLTED OR SILVER SOLDERED. USE (6) 1/4" BOLTS IN PATTERN FOR MECHANICAL CONNECTIONS USE ANTIOXIDENT FOR MECHANICAL CONNECTIONS.
6. THIS GROUND ROD IS TYPICALLY SUPPLIED BY THE POWER COMPANY. SPECIAL PERMISSION MAY HAVE TO BE OBTAINED TO JOIN THIS GROUND ROD TO THE REST OF THE SYSTEM.
7. ANY BENDS IN COPPER STRAP SHOULD BE KEPT TO A 4" MIN RADIUS. AVOID SHARP CORNERS OR TURNS. STRAP CAN BE ATTACHED TO COAX OR WAVEGUIDE WITH A CLAMP.
8. COUNTER POISE SYSTEM SHALL TIE TOGETHER ALL EARTHING GROUNDS INCLUDING BUILDING FRAME.
9. ADDITIONAL GROUNDING RODS SHOULD BE DRIVEN IF THERE IS POOR SOIL CONDUCTIVITY. POOR SOIL CONDUCTIVITY CAN BE MEASURED WITH A GROUND RESISTANCE METER. GROUNDING RODS SHOULD BE KEPT AT SEPARATION DISTANCE DETERMINED BY THE GROUND RESISTANCE TESTS.
10. SYSTEMS UTILIZING MORE THAN ONE HEAT EXCHANGER, PUMP, OR ANY OTHER OPTIONAL ELECTRICAL EQUIPMENT SHALL HAVE EACH PIECE OF EQUIPMENT CONNECTED TO A COMMON GROUNDING POINT IN SIMILAR FASHION AS SHOWN ON THIS DRAWING.
11. FOR TRANSMITTERS CONSISTING OF MORE THAN ONE CABINET POSITIONED IN LINE, EACH CABINET FRAME SHOULD BE CONNECTED IN THE SAME MANNER TO A COMMON GROUNDING POINT.
12. GROUNDING METHOD SHALL MEET NEC ARTICLE 250 AND/OR STATE AND LOCAL CODE.
13. CONNECTION TO EACH HPA CABINET SHOULD BE TO THE CABINET FRAME BY REMOVING A SIDE PANEL, MAKING THE GROUND STRAP CONNECTION, AND REPLACING THE SIDE PANEL.
14. THE HEAT EXCHANGER AND SUMP TANK ASSEMBLY MAY BE LOCATED EITHER INDOORS OR OUTDOORS.
15. HEAT EXCHANGERS AND SUMP TANK ASSEMBLIES APPLY TO LIQUID COOLED TRANSMITTERS ONLY.

1 EQUIPMENT GROUNDING PLAN
SCALE: NTS

CELERIS GROUP

Celeris Group Consulting Engineers
2000 E. Lamar Blvd., Suite 550
Arlington, TX 76006
Phone: 817-446-1700
Fax: 817-460-0677
www.celerisgroup.com

Engineer:
Celeris Group Consulting Engineers
2000 E. Lamar Blvd., Suite 550
Arlington, TX 76006
Phone: 817-446-1700
Fax: 817-460-0677
Registration No: F-13992

Electrical Engineer:
Torres Engineering Services, Inc.
8237 Delafield Dr.
Ft. Worth, TX 76131
Phone: 682-556-0848
Registration No: F-10147

STAMP:

STATE OF TEXAS
ROBERTO TORRES
83419
LICENSED
PROFESSIONAL ENGINEER

1/31/18

No.	Description	Date
0	ISSUED FOR CONSTRUCTION	01/31/18

AMERICAN TOWER CORPORATION

ATC SITE # 89137

DENTON BROADCAST

EQUIPMENT GROUNDING PLAN

Project number	17-10610
Date	01/31/18
Drawn by	KDR
Checked by	ZG

E03.2

Scale

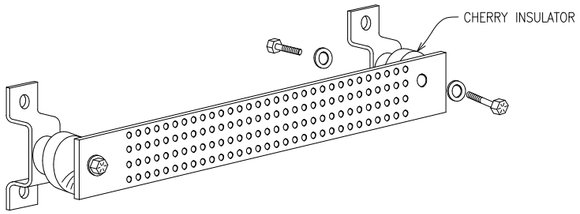

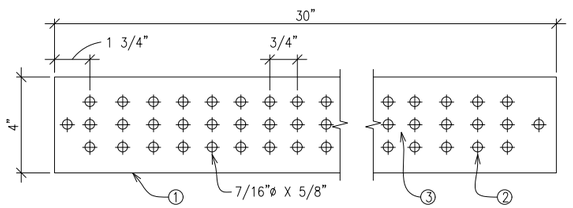

NOTES:

1. TINNED COPPER GROUND BUSS BAR, 1/4"X4"X30", WITH NON-INSULATED MOUNTING KIT OR EQUIVALENT.
2. GROUND BAR SHALL BE SIZED TO ACCOMMODATE ALL GROUNDING CONNECTIONS REQUIRED PLUS PROVIDE 50% SPARE CAPACITY
3. APPLY CONDUCTIVE LUBRICANT (NO-OX COMPOUND OR APPROVED EQUIVALENT) TO EXPOSED AREA OF GROUND BAR.

1 MASTER GROUND BAR DETAIL
SCALE: NTS

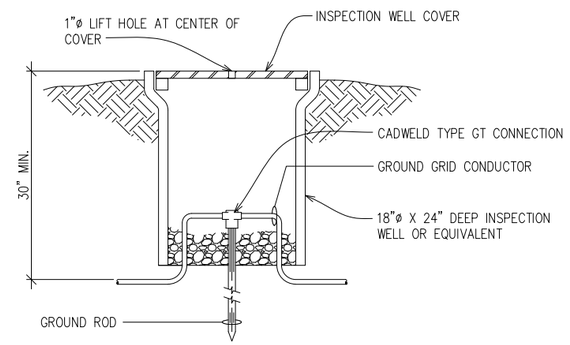

2 INSPECTION WELL DETAIL
SCALE: NTS

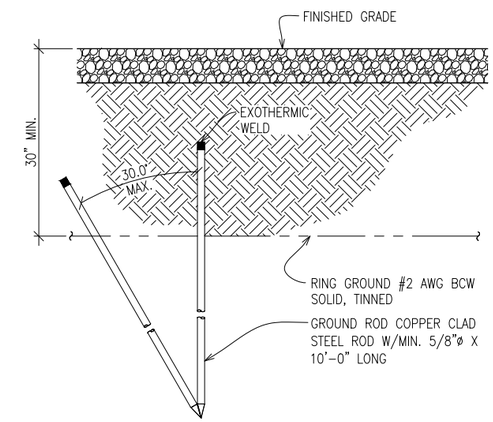

3 GROUND ROD DETAIL
SCALE: NTS

NOTE:
CONTRACTOR TO UTILIZE NO-OX COMPOUND (THOMAS & BETTS) ON ALL LUG CONNECTIONS.

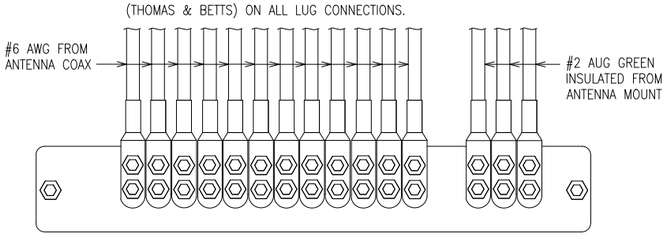

4 UPPER GROUND BAR DETAIL
SCALE: NTS

NOTE:
CONTRACTOR TO UTILIZE NO-OX COMPOUND (THOMAS & BETTS) ON ALL LUG CONNECTIONS.

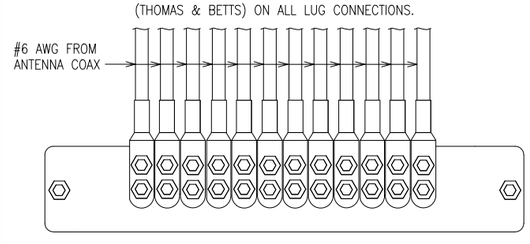

5 MIDDLE GROUND BAR DETAIL (IF REQUIRED)
SCALE: NTS

NOTE:
CONTRACTOR TO UTILIZE NO-OX COMPOUND (THOMAS & BETTS) ON ALL LUG CONNECTIONS.

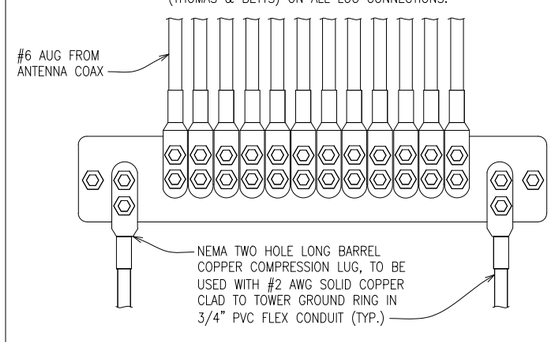

6 LOWER GROUND BAR DETAIL
SCALE: NTS

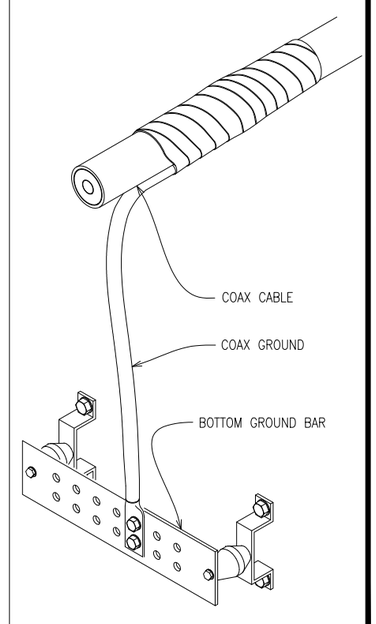

7 COAX GROUNDING DETAIL
SCALE: NTS

CELERIS GROUP

Celeris Group Consulting Engineers
2000 E. Lamar Blvd., Suite 550
Arlington, TX 76006
Phone: 817-446-1700
Fax: 817-460-0677
www.celerisgroup.com

Engineer:
Celeris Group Consulting Engineers
2000 E. Lamar Blvd., Suite 550
Arlington, TX 76006
Phone: 817-446-1700
Fax: 817-460-0677
Registration No: F-13992

Electrical Engineer:
Torres Engineering Services, Inc.
8237 Delafield Dr.
Ft. Worth, TX 76131
Phone: 682-556-0848
Registration No: F-10147

STAMP:

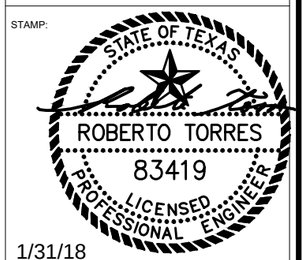

1/31/18

No.	Description	Date
0	ISSUED FOR CONSTRUCTION	01/31/18

AMERICAN TOWER CORPORATION

ATC SITE # 89137

DENTON BROADCAST

ELECTRICAL DETAILS

Project number	17-10610
Date	01/31/18
Drawn by	KDR
Checked by	ZG

E04

Scale

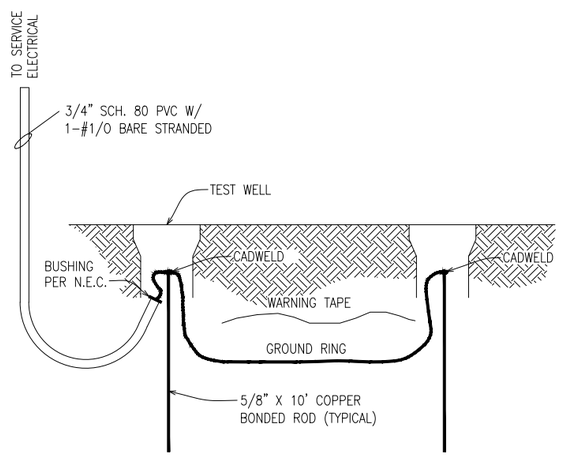

1 GROUNDING ELECTRODE DETAIL
SCALE: NTS

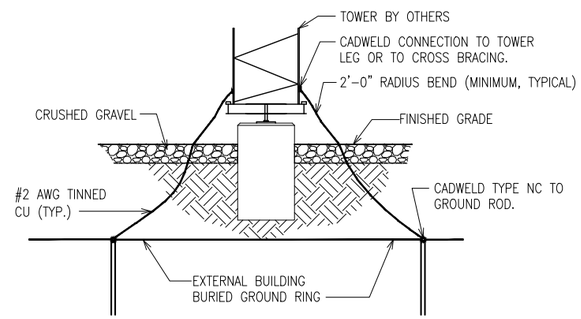

2 TOWER GROUNDING DETAIL
SCALE: NTS

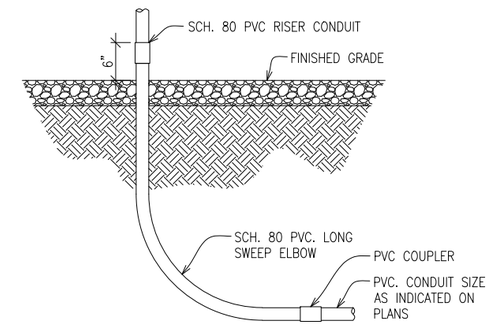

3 CONDUIT TRANSITION DETAIL
SCALE: NTS

NOTE: IT IS NOT NECESSARY TO CONNECT TO THE FENCE FABRIC, TOP RAIL (EXCEPT IN CANADA) OR THE BARBED WIRE IF THE POSTS ARE OF A CONDUCTING MATERIAL. (REF: NESC 93C6)

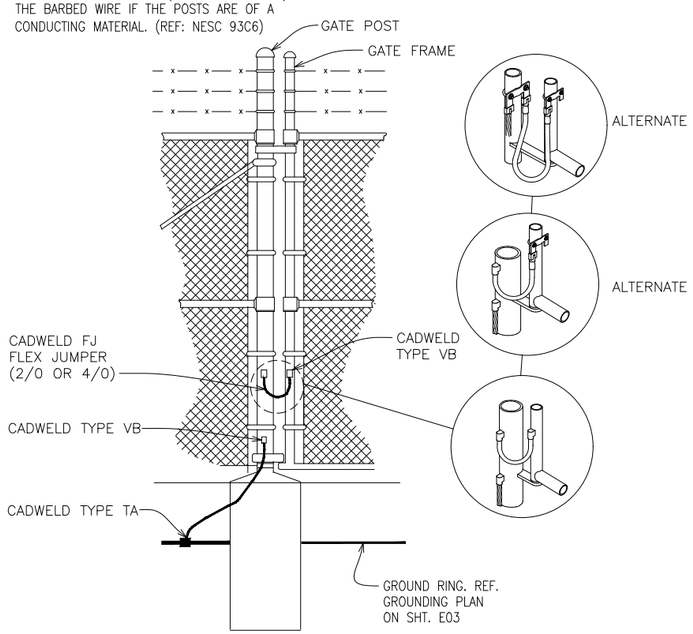

4 FENCE POST GROUNDING DETAIL
SCALE: NTS

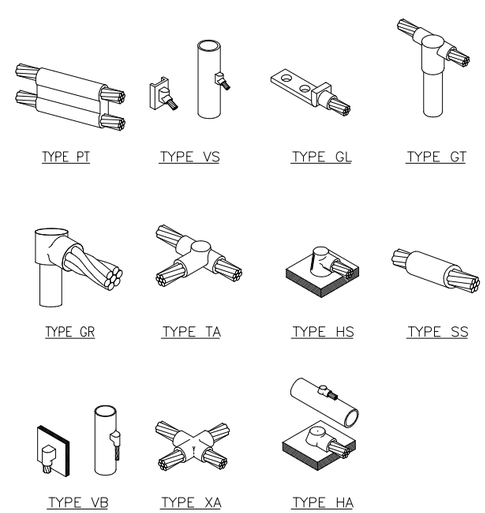

5 CADWELD CONNECTIONS
SCALE: NTS

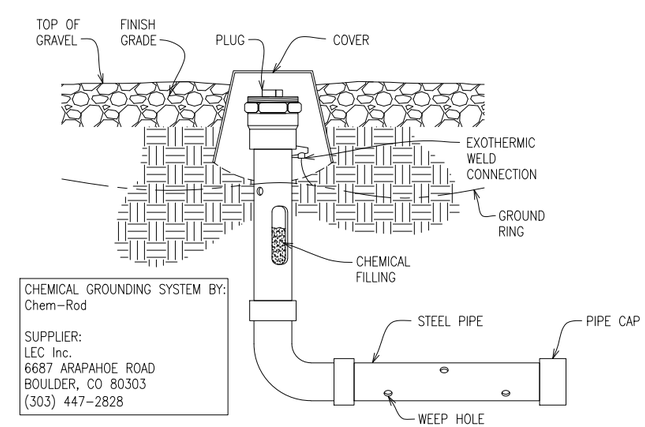

CHEMICAL GROUNDING SYSTEM BY:
Chem-Rod

SUPPLIER:
LEC Inc.
6687 ARAPAHOE ROAD
BOULDER, CO 80303
(303) 447-2828

6 CHEMICAL GROUND ROD (IF REQUIRED)
SCALE: NTS

CELERIS GROUP

Celeris Group Consulting Engineers
2000 E. Lamar Blvd., Suite 550
Arlington, TX 76006
Phone: 817-446-1700
Fax: 817-460-0677
www.celerisgroup.com

Engineer:
Celeris Group Consulting Engineers
2000 E. Lamar Blvd., Suite 550
Arlington, TX 76006
Phone: 817-446-1700
Fax: 817-460-0677
Registration No: F-13992

Electrical Engineer:
Torres Engineering Services, Inc.
8237 Delafield Dr.
Ft. Worth, TX 76131
Phone: 682-556-0848
Registration No: F-10147

STAMP:

STATE OF TEXAS
ROBERTO TORRES
83419
LICENSED PROFESSIONAL ENGINEER

1/31/18

No.	Description	Date
0	ISSUED FOR CONSTRUCTION	01/31/18

AMERICAN TOWER CORPORATION

ATC SITE # 89137

DENTON BROADCAST

ELECTRICAL DETAILS

Project number	17-10610
Date	01/31/18
Drawn by	KDR
Checked by	ZG

E05

Scale

DIVISION 16 ELECTRICAL SPECIFICATIONS

16000 SCOPE OF WORK:

1. THE REQUIREMENTS PRESENTED IN THESE SPECIFICATIONS PERTAINS TO ELECTRICAL INSTALLATION OF A COMPLETELY NEW POWER RACEWAY SYSTEM FOR THE TILLMAN INFRASTRUCTURE WIRELESS INSTALLATION TO THE EXTENT REQUIRED BY THESE CONTRACT DOCUMENT.

   IN GENERAL, THE ELECTRICAL CONTRACTOR (HEREAFTER ALTERNATELY REFERRED TO AS 'CONTRACTOR') SHALL PROVIDE OR RESTORE THE FOLLOWING EXISTING SYSTEMS:
   A. CONDUIT AND RACEWAYS FOR ALL DEVICES, EQUIPMENT, GROUND BUSSES AND GROUND RODS INDICATED ON THE ELECTRICAL PLANS.
   B. CONTRACTOR SHALL RUN FEEDERS SHOWN TO SUPPLY POWER TO ALL EQUIPMENT INDICATED PRIOR TO BID. CONTRACTOR SHALL DETERMINE ANY ADDITIONAL POWER OR GROUNDING WHICH MAY BE REQUIRED DEPENDING ON EQUIPMENT SPECIFIC TO TO THIS SITE AND BUILDING ENCLOSURE.

2. CONTRACTOR(S) WISHING TO BID THIS WORK SHALL BE ABLE TO DEMONSTRATE A MINIMUM OF 5 YEARS PREVIOUS EXPERIENCE WITH THIS TYPE OF PROJECT AND SHALL, IF REQUESTED, SUPPLY DOCUMENTATION TO SUPPORT THIS REQUIREMENT OF QUALIFICATION.

3. EACH QUALIFIED BIDDER SHALL OBTAIN ALL PROPER BID FORMS AND SHALL VISIT THE SITE TO DETERMINE ACTUAL EXISTING CONDITIONS PRIOR TO PREPARING A BID.

4. CONTRACTOR SHALL NOTE THAT IF THIS CURRENTLY HOSTS ONE OR MORE OTHER TENANTS WITH TELEPHONE AND/OR ELECTRICAL SERVICE, CONTRACTOR SHALL NOT CAUSE LOSS OF POWER, COMMUNICATION OR ANY REQUIRED SERVICES TO TILLMAN INFRASTRUCTURE WIRELESS OR ANY OTHER SITE OCCUPANT IN ANY MANNER WITHOUT EXPRESS WRITTEN DIRECTION BY TILLMAN INFRASTRUCTURE WIRELESS CONSTRUCTION SUPERVISION. THE CONTRACTOR SHALL BE LIABLE FOR ANY LOSS OF REVENUE TO ANY SITE OCCUPANT BECAUSE OF ANY NONSCHEDULED OUTAGES AS DETERMINED BY CONTRACT AGREEMENT WITH TILLMAN INFRASTRUCTURE WIRELESS.

16001 GENERAL: IT IS THE INTENTION OF THESE SPECIFICATIONS AND THE RELATED PLANS TO SHOW COMPLETE, PROPERLY FUNCTIONING SYSTEMS. ALL SYSTEMS, WIRING AND RACEWAYS SHALL BE INSTALLED PER NFPA-70 (APPLICABLE) AND AUTHORITY HAVING JURISDICTION

16002 SPECIAL CONDITIONS FOR ELECTRICAL WORK:

1. THE CONSTRUCTION DOCUMENTS INCLUDING BUT NOT LIMITED TO THESE PLANS, SPECIFICATIONS, AND CONTRACTS ARE ISSUED FOR INFORMATION TO BE COMPLIED WITH BY THE ELECTRICAL CONTRACTOR AND ANY OR ALL SUBCONTRACTORS AND TRADES EMPLOYED ON THIS PROJECT BY THE ELECTRICAL CONTRACTOR, HEREAFTER REFERRED TO AS CONTRACTOR.

2. THE TERM "CONTRACTOR" IN THIS SECTION REFERS TO THE CONTRACTOR WHOSE WORK IS COVERED BY THIS ELECTRICAL SPECIFICATION.

3. ALL WORK SHALL BE DONE AND TESTED IN ACCORDANCE WITH THESE PLANS AND SPECIFICATIONS AND WITH LOCAL AND NATIONAL CODES. REPORT SUPPOSED CONFLICTS WITH PLANS AND SPECIFICATIONS IMMEDIATELY TO THE CONSTRUCTION SUPERINTENDENT WHO WILL ISSUE INSTRUCTIONS OR ADDENDA TO RESOLVE SUCH CONFLICT. IN NO CASE SHALL A CONTRACTOR BASE ITS BID ON WORK THAT WILL NOT BE ACCEPTABLE TO CODE AND THESE CONTRACT DOCUMENTS. NO CONSIDERATION SHALL BE GIVEN TO REQUESTS FOR EXTRA COMPENSATION TO BRING THE BASE WORK INTO CONFORMANCE WITH THESE DOCUMENTS.

4. ALL MATERIAL FOR WHICH THERE IS A CATEGORY FOR TESTING BY UL OR CSA SHALL BE SO TESTED, LISTED AND LABELED.

5. AS MENTIONED ABOVE, IT IS THE INTENT OF THESE DOCUMENTS TO PRODUCE A COMPLETE AND FINISHED ELECTRICAL SYSTEM TO THE EXTENT SHOWN IN THESE CONTRACT DOCUMENTS. THE TILLMAN INFRASTRUCTURE WIRELESS CONSTRUCTION MANAGER SHALL BE THE FINAL AUTHORITY FOR ACCEPTANCE OF THE WORK. THE CONTRACTOR IS SOLELY RESPONSIBLE FOR COORDINATING HIS WORK WITH OTHER TRADES AND WITH HIS SUBCONTRACTORS AS NECESSARY TO PROVIDE A FINAL AND COMPLETE ELECTRICAL INSTALLATION.

6. THE CONTRACTOR SHALL EMPLOY ONLY SKILLED, EXPERIENCED, AND WHEN REQUIRED, LICENSED SUB CONTRACTORS AND WORKERS. MATERIALS AND EQUIPMENT SHALL BE INSTALLED IN ACCORDANCE WITH THE MANUFACTURER'S WRITTEN INSTRUCTIONS, IN ACCORDANCE WITH THE BEST TRADE PRACTICES AND IN A NEAT AND WORKMAN LIKE MANNER. WORK WHICH IN THE OPINION OF THE CONSTRUCTION MANAGER DOES NOT CONFORM TO THE INTENT OF THESE PLANS AND SPECIFICATIONS SHALL BE REMOVED AND REPLACED AT THE CONTRACTOR'S EXPENSE.

7. THE PLANS AND DETAILS ARE DIAGRAMMATIC IN NATURE. COORDINATE THE LOCATION OF ITEMS NOT CLEARLY DIMENSIONED WITH THE CONSTRUCTION SUPERINTENDENT.

8. SECURE ALL NECESSARY PERMITS, LICENSES AND INSPECTIONS AND PAY ALL REQUIRED FEES, TESTS AND WAGE SCALES THAT MAY BE REQUIRED. THE CONTRACTOR SHALL INCLUDE THE FINAL INSPECTION CERTIFICATE IN FINAL DOCUMENTS.

9. THE CONTRACTOR IS RESPONSIBLE FOR UNDERSTANDING THE EXISTING SITE CONDITIONS. HE SHALL VISIT THIS SITE (BY APPOINTMENT) AT ANY REASONABLE TIME.

10. LOCATIONS OF UTILITY CONNECTIONS SHOWN ON THE SITE ARE APPROXIMATE AND ARE BASED ON SITE OBSERVATIONS. ACTUAL UTILITY CONNECTIONS AND EXACT LOCATIONS MAY VARY SLIGHTLY. THE CONTRACTOR SHALL CONTACT THE UTILITY COMPANIES INVOLVED PRIOR TO BID TO CONFIRM THE ACTUAL CONDITIONS OF CONNECTION. THE CONTRACTOR SHALL INCLUDE IN HIS BID THE ACTUAL CONDITIONS OF CONNECTION AND ANY FEES REQUIRED BY THE UTILITY FOR PROPOSED NEW 200 AMP, 240/120 VAC SINGLE PHASE UTILITY SERVICE THE CONTRACTOR SHALL COORDINATE WITH THE ELECTRICAL COMPANY CONCERNING ITEMS WHICH HE MUST PROVIDE AND THE CONSTRUCTION SCHEDULE.

11. AFTER COMPLETION OF THE WORK AND BEFORE FINAL INSPECTION, THE CONTRACTOR SHALL THOROUGHLY CLEAN EACH EXPOSED DEVICE, PIECE OF EQUIPMENT AND FIXTURE TO THE SATISFACTION OF THE CONSTRUCTION SUPERINTENDENT.

12. THE CONTRACTOR SHALL SUBMIT ALL MATERIALS LISTED BELOW TO THE ENGINEER FOR APPROVAL PRIOR TO INSTALLATION. FAILURE TO OBTAIN APPROVAL ON MATERIAL SHALL BE CAUSE FOR CONTRACTOR TO REMOVE ANY MATERIALS NOT APPROVED AND REPLACE THEM AT HIS OWN EXPENSE AND WITH NO ALLOWANCE IN THE TIME ALLOWED FOR CONSTRUCTION.
    SUBMITTALS: (PROVIDE IN QUANTITY REQUESTED BY THE CONSTRUCTION MANAGER)

    THE FOLLOWING MINIMUM ITEMS SHALL BE SUBMITTED AT THE SAME TIME UNDER ONE COVER IN THE ORDER LISTED:

    TAB ONE: WIRE, CONDUIT, GROUND RODS, GROUND BUSSES, ELECTRICAL (CAD) WELD DEVICES, METALLIC SHEATHED FLEXIBLE CONDUIT, OUTLET AND PULL BOXES.

    TAB TWO: SWITCHES, ENCLOSURES, CABINETS, TIMERS, AND RECEPTACLES

    TAB THREE: PANEL BOARDS, DISCONNECT SWITCHES (DESIGNATE USE OF EACH), FUSES, AND CIRCUIT BREAKERS OR OTHER CONTROL DEVICES.

13. THE CONTRACTOR SHALL GUARANTEE THAT ALL WORK PERFORMED UNDER THIS CONTRACT IS FREE FROM DEFECTS IN MATERIAL AND WORKMANSHIP FOR ONE YEAR (MINIMUM) FOLLOWING FINAL ACCEPTANCE BY THE OWNER'S REPRESENTATIVE. THE CONTRACTOR SHALL RESPOND TO REQUESTS FOR SERVICE IN A TIMELY MANNER APPROPRIATE TO THE SERVICE REQUESTED, THE CONTRACTOR SHALL IMMEDIATELY REPAIR OR REPLACE ANY ITEMS FOUND TO BE DEFECTIVE WITHIN THE GUARANTEE PERIOD AT NO COST TO THE OWNER.

14. THE CONTRACTOR SHALL MAINTAIN ON THE SITE A SET OF CONSTRUCTION DOCUMENTS MARKED IN RED TO SHOW THE ACTUAL CONDITIONS OF CONSTRUCTION. LOCATIONS OF EQUIPMENT AND ROUTING OF SYSTEMS SHALL BE ACCURATELY RECORDED DURING THE COURSE OF CONSTRUCTION. CONTRACTOR SHALL FORWARD A REPRODUCIBLE COPY OF THE RECORD DRAWINGS TO TILLMAN INFRASTRUCTURE WIRELESS AT THE COMPLETION OF CONSTRUCTION AND SHALL MAINTAIN THE ORIGINAL RECORD DRAWINGS FOR USE DURING THE GUARANTEE PERIOD. FINAL PAY REQUEST SHALL NOT BE APPROVED WITHOUT THIS FINALIZED INFORMATION IN ACCORDANCE WITH TILLMAN INFRASTRUCTURE WIRELESS CLOSE OUT INSTRUCTIONS.

15. IN ADDITION TO THE ABOVE REQUIRED RECORD DRAWINGS, THE CONTRACTOR SHALL FURNISH TO TILLMAN INFRASTRUCTURE WIRELESS AT THE COMPLETION OF THE WORK THE FOLLOWING DOCUMENTS:

    TEST REPORTS, WARRANTIES, OPERATIONS AND MAINTENANCE MANUALS AND INFORMATION:

    A. A CERTIFICATE OF GUARANTEE/WARRANTY SHOWING THE DATES OF BEGINNING AND ENDING OF THE WARRANTY
    B. DOCUMENTS PERTINENT TO THE GUARANTEES AND WARRANTIES OF MANUFACTURERS.
    C. WRITTEN INSTALLATION INSTRUCTIONS FOR EQUIPMENT INSTALLED ON THE PROJECT.
    D. THREE SETS OF CUT SHEETS FOR EACH PIECE OF EQUIPMENT INSTALLED FOR ELECTRICAL SYSTEMS.
    E. CERTIFIED RESISTANCE MEASUREMENT DATA AND DRAWINGS USED DURING CONSTRUCTION.

16. ALL MATERIALS SHALL BE NEW AND OF DOMESTIC, OR IF APPROVED, NAFTA MANUFACTURE. ALL ITEMS OF THE SAME TYPE ON THE PROJECT SHALL BE OF THE SAME MANUFACTURER.

17. PRODUCTS OF VARIOUS MATERIALS AND EQUIPMENT ARE SPECIFIED IN ORDER TO ESTABLISH A STANDARD OF QUALITY AND A BASIS OF DESIGN. OTHER SIMILAR MATERIALS MAY BE ACCEPTABLE AS SUBSTITUTIONS PROVIDED THEY MEET THE SAME STANDARDS OF QUALITY AND DESIGN CRITERIA IN THE OPINION OF THE ENGINEER ALTERNATE ITEMS SHALL BE SUBMITTED TO THE ENGINEER FOR APPROVAL PRIOR TO INSTALLATION. THE DECISION OF THE ENGINEER REGARDING ACCEPTABILITY SHALL BE FINAL. THE CONTRACTOR SHALL BEAR ALL COSTS, INCLUDING THAT OF OTHER TRADES AND THE DESIGN TEAM, ASSOCIATED WITH ACCOMMODATIONS FOR PERMITTED SUBSTITUTIONS.

16123 WIRE AND CABLE

1. ALL WIRE AND CABLE SHALL BE COPPER OF AT LEAST 98% CONDUCTIVITY.

2. ALL INSULATION SHALL BE TYPE THWN EXCEPT TYPE THW MAY BE USED FOR SIZES LARGER THAN #6 AWG.

3. NO WIRE SMALLER THAN #12 AWG MAY BE USED EXCEPT THAT CONTROL CIRCUIT MAY BE #14.

4. A STRICT METHOD OF COLOR CODING SHALL BE MAINTAINED. UNLESS THE AUTHORITY HAVING JURISDICTION HAS A DIFFERENT STANDARD, THE FOLLOWING SHALL BE MAINTAINED: A PHASE: BLACK; B PHASE: RED; (AND WHERE USED,) C PHASE: BLUE; NEUTRAL: WHITE; GROUND: GREEN; SWITCH LEG: BROWN: TRAVELERS: BROWN.

5. WIRE CONNECTORS FOR #8 AND SMALLER MAY BE SPRING STEEL CONNECTORS. SPLIT BOLT CONNECTORS WITH RUBBER AND VINYL TAPE SHALL BE USED FOR SIZES LARGER THAN #8. POWER DISTRIBUTION BLOCKS MAY BE USED FOR ANY SIZE CONDUCTOR FOR WHICH IT IS LISTED.

6. UL LISTED WIRE PULLING LUBRICANT SHALL BE USED ON ALL RACEWAY INSTALLATIONS.

16130 RACEWAY SYSTEMS

1. ALL WIRING ABOVE GRADE OR OTHERWISE EXPOSED SHALL BE IN METALLIC CONDUIT. TYPE MC CABLE OR FLEXIBLE CONDUIT MAY NOT BE USED UNLESS SHOWN OR REQUIRED BY THESE SPECIFICATIONS EMT, GALVANIZED INTERMEDIATE AND RIGID CONDUIT ARE ALL ACCEPTABLE WIRING MATERIALS FOR ABOVE GRADE PROVIDED THEY ARE ACCEPTABLE TO LOCAL CODE ENFORCEMENT.

2. ALL FITTINGS SHALL BE COMPRESSION TYPE OR SCREW TYPE AND MAY NOT BE DIE CAST SET SCREW.

3. CONDUIT BELOW GRADE SHALL BE SCHEDULE 40 PVC WITH MATCHING FITTINGS EXCEPT THAT ELBOWS AND VERTICAL CONDUITS IN CONTACT WITH EARTH WHICH ARE LIKELY TO BE DAMAGED BY EXCESSIVE PULLING ROPE TENSION MAY BE PLASTIC WRAPPED INTERMEDIATE OR RIGID GALVANIZED STEEL.

4. EXPOSED CONDUIT OUTDOORS ABOVE GRADE OR IN DAMP LOCATIONS SHALL BE GALVANIZED RIGID STEEL OR INTERMEDIATE METALLIC CONDUIT.

5. ULTRAVIOLET PROTECTED PLASTIC COATED FLEXIBLE METAL CONDUIT MAY BE USED WHERE INDICATED AND OTHERWISE FOR THE CONNECTION OF ROTATING OR VIBRATING EQUIPMENT. SUCH EQUIPMENT LOCATED OUTDOORS OR IN DAMP LOCATIONS SHALL BE CONNECTED WITH LIQUID TIGHT FLEXIBLE METAL CONDUIT USING LISTED FITTINGS.

6. MINIMUM COVER FOR OUTDOOR CONDUITS SHALL BE 36 INCHES. NOTE: UTILITY CONDUITS MAY HAVE A GREATER DEPTH REQUIREMENT.

16250 GROUNDING

1. ALL EQUIPMENT AND SERVICE ENTRANCE GROUNDING SHALL BE PER NFPA-70 CURRENT EDITION AS ADOPTED BY LOCAL AUTHORITY HAVING JURISDICTION ON THIS PROJECT. PER ARTICLE 250 AS WELL AS OTHER APPLICABLE STANDARDS SUCH AS THE NATIONAL ELECTRICAL SAFETY CODE, NFPA 780 (LIGHTNING PROTECTION) AND TILLMAN INFRASTRUCTURE WIRELESS STANDARDS ON EQUIPMENT GROUNDING.

16400 WIRING DEVICES

1. ALL WIRING DEVICES SHALL BE SPECIFICATION GRADE RATED AT 20 AMPS.

2. PROVIDE DEVICES AS SHOWN ON DOCUMENTS. CONSULT WITH CONSTRUCTION MANAGER AND OTHER TRADES FOR EXACT LOCATION OF OUTLETS. WHERE OUTLETS SERVE A SPECIFIC PIECE OF EQUIPMENT AND WHERE POSSIBLE, CONCEAL OUTLET BEHIND THAT EQUIPMENT.

16500 PANEL BOARDS: VERIFY PROVIDED BY TILLMAN INFRASTRUCTURE WIRELESS (OR CONTRACTOR) AND INSTALLED BY THIS CONTRACTOR.

1. VERIFY THAT THE INTERRUPTING RATING OF CIRCUIT BREAKERS SHALL BE GREATER THAN THE AVAILABLE FAULT CURRENT. VERIFY THE AVAILABLE FAULT CURRENT WITH THE SERVING ELECTRICAL UTILITY.
2. PROVIDE SOLID NEUTRALS ON ALL PANELS AND MAIN SERVICE ENTRANCE DISCONNECT (IF MAIN SERVICE DISCONNECT REQUIRED).

3. PROVIDE 1" BLACK MICARTA TAGS WITH 1/2" WHITE LETTERS FOR EACH PANELBOARD AND DISCONNECT MATCHING PROJECT DOCUMENTATION. TAGS SHALL BE "POP-RIVETTED" THROUGH PANEL COVER.

16600 LIGHTING FIXTURES (IF SHOWN)

1. PROVIDE LIGHTING FIXTURES AS SHOWN ON THE DOCUMENTS. QUESTIONS ON LIGHT FIXTURE TYPES SHALL BE DIRECTED TO TILLMAN INFRASTRUCTURE WIRELESS FOR CLARIFICATION. THE CONTRACTOR SHALL PROVIDE ALL LIGHTING FIXTURES.

2. FASTEN EACH LIGHTING FIXTURE TO AN OUTLET BOX OR STRUCTURAL FRAMING. INCLUDE ALL NECESSARY HARDWARE AND SUPPORTING DEVICES TO ACCOMPLISH THIS.

3. PROVIDE NEW LAMPS OF THE TYPE RECOMMENDED BY THE PLANS AND SPECIFICATION AT THE TIME OF FINAL ACCEPTANCE.

4. ALL LIGHTING FIXTURES SHALL BE CLEAN AND FULLY OPERATIONAL AT THE TIME OF FINAL ACCEPTANCE.

16700 EQUIPMENT CONNECTIONS

1. PROVIDE ELECTRICAL POWER AND LIGHTING CONNECTIONS FOR ALL EQUIPMENT ON THE PROJECT WHETHER FURNISHED BY THIS CONTRACTOR OR OTHERS.
2. CAREFULLY RESEARCH THE DOCUMENTS AND CONSULT WITH OTHERS TO DETERMINE THE REQUIREMENTS FOR CONNECTIONS.

16900 SPECIAL MODULAR CELL INSTALLATION GROUNDING INTEGRITY AND IMPEDANCE TESTING:

1. CONTRACTOR SHALL PRESENT MEASUREMENTS SHOWING CERTIFIED THIRD PARTY GROUND IMPEDANCE TESTING AS REQUIRED BY THE CONTRACT DOCUMENTATION. TESTING PER ANSI/IEEE STD 81-1983, IEEE GUIDE FOR MEASURING EARTH RESISTIVITY SHALL BE AS APPROVED BY TILLMAN INFRASTRUCTURE WIRELESS CONSTRUCTION MANAGEMENT.

2. THIS INSTALLATION SHALL BE GROUNDED WITH AN INTEGRATED (MULTI-POINT) GROUNDING SYSTEM.

3. SURGE PROTECTION SHALL BE TILLMAN INFRASTRUCTURE WIRELESS APPROVED EQUIPMENT. IT SHALL BE BONDED TO A GROUND BAR AT THE SERVICE ENTRANCE POINT THAT IS CONNECTED DIRECTLY TO THE GROUNDING ELECTRODE SYSTEM.

4. REVIEW EXISTING INSTALLATION AND FOLLOW TILLMAN INFRASTRUCTURE WIRELESS CELL SITE GROUNDING AND LIGHTNING PROTECTION STANDARDS REPORT PERCEIVED DIFFICULTIES WITH MEETING THIS CRITERIA WITH TILLMAN INFRASTRUCTURE WIRELESS CONSTRUCTION MANAGEMENT. OTHER REQUIRED STANDARDS SHALL BE: NFPA-780 STANDARD FOR INSTALLATION OF LIGHTNING SYSTEMS AND POLY PHASE EQUIPMENT; AND, THE GROUNDS FOR LIGHTNING PROTECTION AND EMP PROTECTION", SECOND ED. BY ROGER R. BLOCK.

5. THE ELECTRICAL CONTRACTOR SHALL PROVIDE BONDING STRAPS, CAD WELDING AND HARDWARE FOR EACH SEPARATE PIECE OF THE EQUIPMENT MOUNTING PLATFORM TO ASSURE THAT ALL PIECES ARE ELECTRICALLY CONNECTED. SUCH CONNECTIONS SHALL BE MADE AND TESTED TO DEMONSTRATE LOW ELECTRICAL RESISTANCE ACCEPTABLE TO TILLMAN INFRASTRUCTURE WIRELESS BETWEEN ANY TWO POINTS ON THE PLATFORM, MOUNTS OR STRUCTURE.

CELERIS GROUP

Celeris Group Consulting Engineers
2000 E. Lamar Blvd., Suite 550
Arlington, TX 76006
Phone: 817-446-1700
Fax: 817-460-0677
www.celerisgroup.com

Engineer:
Celeris Group Consulting Engineers
2000 E. Lamar Blvd., Suite 550
Arlington, TX 76006
Phone: 817-446-1700
Fax: 817-460-0677
Registration No: F-13992

Electrical Engineer:
Torres Engineering Services, Inc.
8237 Delafield Dr.
Ft. Worth, TX 76131
Phone: 682-556-0848
Registration No: F-10147

STAMP:

STATE OF TEXAS
ROBERTO TORRES
83419
LICENSED
PROFESSIONAL ENGINEER

1/31/18

No.	Description	Date
0	ISSUED FOR CONSTRUCTION	01/31/18

AMERICAN TOWER CORPORATION

ATC SITE # 89137

DENTON BROADCAST

ELECTRICAL SPECIFICATIONS

Project number	17-10610
Date	01/31/18
Drawn by	KDR
Checked by	ZG

E06

Scale

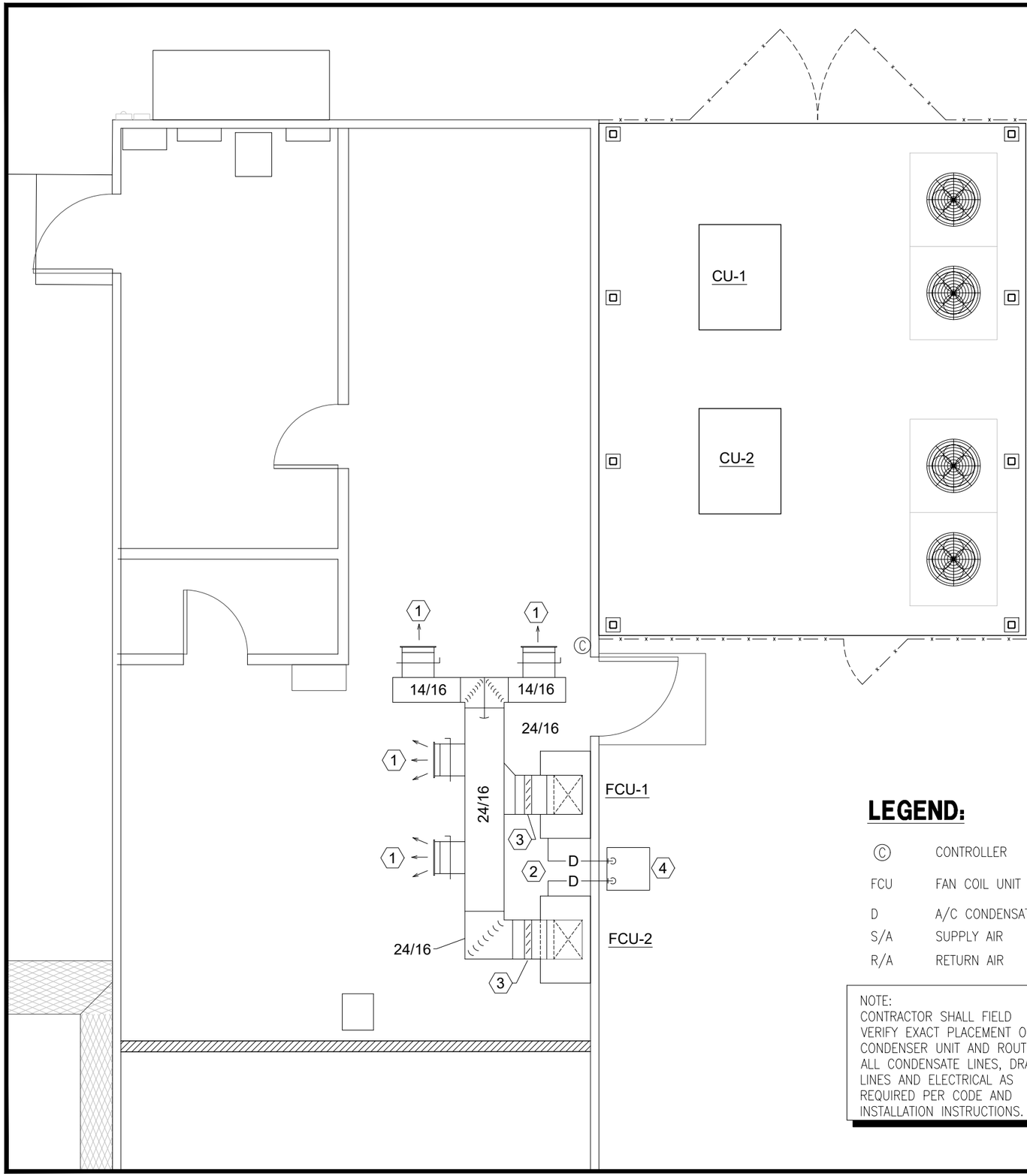

LEGEND:

C	CONTROLLER
FCU	FAN COIL UNIT
D	A/C CONDENSATE DRAIN
S/A	SUPPLY AIR
R/A	RETURN AIR

NOTE:
CONTRACTOR SHALL FIELD VERIFY EXACT PLACEMENT OF CONDENSER UNIT AND ROUTE ALL CONDENSATE LINES, DRAIN LINES AND ELECTRICAL AS REQUIRED PER CODE AND INSTALLATION INSTRUCTIONS.

GENERAL MECHANICAL NOTES

A. PERFORM ALL WORK IN ACCORDANCE WITH MECHANICAL CODE, PLUMBING CODE, ENERGY CODE AND LOCAL CODES AND AUTHORITIES HAVING JURISDICTION. PROVIDE ALL PERMITS, INSPECTIONS, LICENSES AND FEES.

B. ALL DIMENSIONS SHOWN ON THE DRAWINGS FOR DUCTWORK ARE NET INSIDE CLEAR DIMENSIONS. THE FIRST FIGURE OF THE DUCT SIZE INDICATES THE DIMENSION OF THE FACE SHOWN. VERIFY THAT THE DUCTWORK SPECIFIED WILL FIT IN THE SPACE AVAILABLE USING THE ARCHITECTURAL, STRUCTURAL, AND ELECTRICAL DRAWINGS AS REFERENCE PRIOR TO FABRICATION AND INSTALLATION.

C. MOUNT THERMOSTATS AT 4'-0" AFF T0 THE CENTER OF THE DEVICE. ALL INSTALLATIONS SHALL COMPLY WITH TEXAS ACCESSIBILITY STANDARDS.

D. BACK PANEL OF ALL CEILING MOUNTED AIR DEVICES SHALL BE INSULATED.

E. ALL DUCTWORK TO BE RIGID SHEET METAL CONSTRUCTED FROM GALVANIZED SHEET STEEL IN ACCORDANCE WITH SMACNA LOW VELOCITY DUCT CONSTRUCTION STANDARDS. ASSEMBLE AND INSTALL DUCTWORK IN ACCORDANCE WITH RECOGNIZED INDUSTRY PRACTICE FOR ACHIEVING AN AIR TIGHT SYSTEM. FURNISH ALL REQUIRED DAMPERS, TRANSITIONS, CONNECTIONS, AND ACCESSORIES NECESSARY FOR A COMPLETE OPERATING SYSTEM. DUCT SYSTEMS SHALL BE CONSTRUCTED TO MEET 2" W.G. SMACNA DUCT PRESSURE CLASS.

F. FOR INTERIOR SUPPLY AND RETURN AIR RECTANGULAR AIR DUCTS, PROVIDE 2" THICK DUCT WRAP WITH AN INSTALLED R-VALUE OF 6.3. THERMAL INSULATION TO COMPLY WITH AN NFPA FLAME SPREAD OF 25 OR LESS, AND SMOKE DEVELOPED RATING NO GREATER THAN 50. INSTALL INSULATION SYSTEMS PER MANUFACTURER'S INSTALLATION INSTRUCTIONS AND RECOMMENDATIONS.

G. CONDENSATE PIPE SHALL BE TYPE L HARD COPPER INSULATED WITH 3/4" ARMAFLEX INSULATION OR EQUAL.

H. REFRIGERANT PIPING SHALL BE TYPE ACR COPPER WITH BRAZED JOINTS FOR R-410A REFRIGERANT. PIPING TO BE INSULATED WITH 1 1/2 INCH ARMAFLEX INSULATION AND PROTECTED WHEN INSTALLED OUTDOORS. COORDINATE WITH FCU/CU MANUFACTURER FOR PIPE SIZING. PIPING TO BE ROUTED AND SUPPORTED ABOVE GROUND AND ROUTED IN A NEAT MANNER.

I. CONTRACTOR SHALL COORDINATE FINAL EQUIPMENT ELECTRICAL INFORMATION WITH ELECTRICAL CONTRACTOR PRIOR TO ORDERING OF EQUIPMENT TO INSURE PROPER WIRE SIZES AND BREAKERS ARE INSTALLED.

NOTES BY SYMBOL "⬡"

1. PROVIDE TYPE "A" S/A GRILLE WITH MANUAL BALANCING DAMPER. BALANCE AIR DEVICE TO 700 CFM.
2. ROUTE 1" CONDENSATE DRAIN PIPE FROM UNIT AND TERMINATE AT CONDENSATE DRAIN PIT. CONDENSATE DRAIN PIT SHALL BE 24" X 24" X 36" DEEP AND CONSTRUCTED WITH PERFORATED CHIMNEY TILE AND CRUSHED STONE.
3. PROVIDE BACKDRAFT DAMPER IN DUCT.
4. CONDENSATE DRAIN PIT

CELERIS GROUP

Celeris Group Consulting Engineers
2000 E. Lamar Blvd., Suite 550
Arlington, TX 76006
Phone: 817-446-1700
Fax: 817-460-0677
www.celerisgroup.com

Engineer:
Celeris Group Consulting Engineers
2000 E. Lamar Blvd., Suite 550
Arlington, TX 76006
Phone: 817-446-1700
Fax: 817-460-0677
Registration No: F-13992

Electrical Engineer:
Torres Engineering Services, Inc.
8237 Delafield Dr.
Ft. Worth, TX 76131
Phone: 682-556-0848
Registration No: F-10147

STAMP:

STATE OF TEXAS
TIMOTHY M. MALTZ
94231
LICENSED PROFESSIONAL ENGINEER
01/31/2018
F-11112

No.	Description	Date
0	ISSUED FOR CONSTRUCTION	01/31/18

AMERICAN TOWER CORPORATION

ATC SITE # 89137

DENTON BROADCAST

MECHANICAL PLAN

Project number	17-10610
Date	01/31/18
Drawn by	KDR
Checked by	ZG

M01

Scale

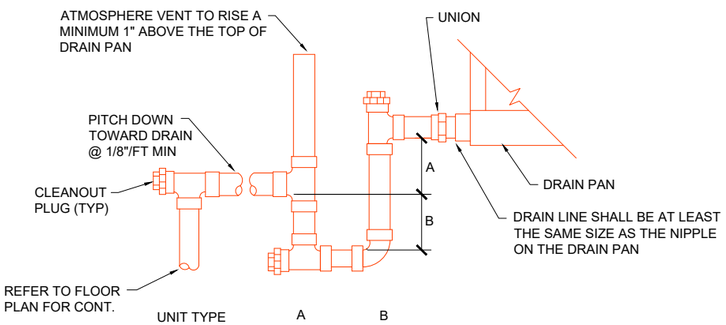

UNIT TYPE	A	B
DRAW THRU	2" PLUS X	X
BLOW THRU	1" MINIMUM	2X

WHERE X = STATIC PRESSURE IN PAN

1 TYPICAL CONDENSATE CONNECTION DETAIL

SCALE: NO SCALE

DUCTWORK SHALL BE GALVANIZED SHEET METAL INSTALLED AND SEALED PER LATEST SMACNA STANDARDS. SUPPLY DUCTWORK SHALL BE WRAPPED WITH 2" DUCTWRAP FOR A MINIMUM INSTALLED R-VALUE OF 6.0.

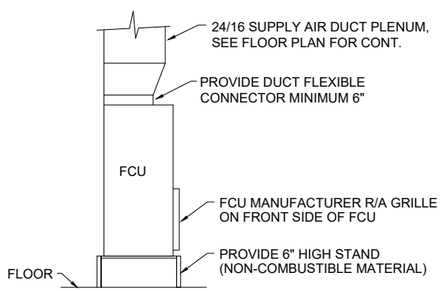

2 TYPICAL FAN COIL UNIT WITH DUCTWORK

SCALE: NO SCALE

GENERAL FIRE PROTECTION NOTES

1 MODIFY EXISTING WET PIPE FIRE SPRINKLER SYSTEM, RELOCATE / ADD SPRINKLER HEADS AS REQUIRED TO ACCOMMODATE THE NEW CONSTRUCTION. PROVIDE COMPLETE AND OPERABLE WET PIPE FIRE SUPPRESSION SYSTEMS ENGINEERED AND DESIGNED CONFORMING TO NFPA 13, INSTALLATION OF SPRINKLER SYSTEMS; NFPA 24, PRIVATE SERVICE MAINS AND THEIR APPURTENANCES; ALL APPLICABLE CITY, STATE AND NATIONAL CODES AND THE CODES AND ORDINANCES OF ALL OTHER AUTHORITIES HAVING JURISDICTION. THE SYSTEM SHALL MEET ALL APPLICABLE REQUIREMENTS OF THE CITY FIRE DEPARTMENT. CONTRACTOR SHALL PROVIDE FIRE SPRINKLER DRAWINGS TO LOCAL OFFICIALS FOR APPROVAL. SYSTEM COMPONENTS SHALL BE EQUIVALENT TO EXISTING CONDITIONS IN TERMS OF MATERIALS.

2 CONTRACTOR SHALL VISIT SITE PRIOR TO BID AND VERIFY EXISTING CONDITIONS.

AIR DEVICE SCHEDULE

MARK	SERVES	NECK SIZE	FACE SIZE	MOUNTING	DESCRIPTION	MATERIAL	MANUFACTURER MODEL NUMBER
A	SUPPLY	18" X 12"	20" X 14"	SURFACE	LOUVER GRILLE	STEEL	TITUS 300RS

1. DIFFUSERS, REGISTERS, AND GRILLES SHALL BE TYPE FOR MOUNTING IN RESPECTIVE SURFACE TYPE. PROVIDE TITUS OR APPROVED EQUAL.
2. FINISH FOR DIFFUSERS, REGISTERS, AND GRILLES SHALL BE MANUFACTURER'S STANDARD WHITE, UNLESS OTHERWISE INDICATED.
3. PROVIDE TRANSITION OR ADAPTER WHERE REQUIRED TO ADAPT DUCTWORK TO NECK SIZE.
4. PROVIDE MANUAL BALANCING DAMPER FULL SIZE OF AIR DEVICE NECK ACCESSIBLE THROUGH DEVICE FACE.

FAN COIL UNIT SCHEDULE

MARK	TYPE	SUPPLY AIRFLOW (ACFM)	EXTERNAL STATIC PRESSURE (IN WTR)	EVAPORATOR PERFORMANCE				MOTOR	ELECTRICAL DATA					WEIGHT (LB)	MANUFACTURER MODEL NUMBER
				T.C. (MBH)	S.C. (MBH)	ENTERING		BHP	VOLTS	PHASE	HZ	MCA	MOCP		
						D.B.	W.B.								
FCU-1	VERTICAL	2,800	0.75	85.2	659	75.0	63.0	1.2	208	3	60	9	15	200	CARRIER 40RUAA08T1A5 (7.5-TON)
FCU-2	VERTICAL	2,800	0.75	85.2	659	75.0	63.0	1.2	208	3	60	9	15	200	CARRIER 40RUAA08T1A5 (7.5-TON)

1. EXTERNAL STATIC PRESSURE EXCLUDES COIL AND FILTER LOSSES. TWO-SPEED FAN CONTROLLER VIA VFD
2. PROVIDE UNIT FOR VERTICAL CONFIGURATION WITH WATER FLOW SENSOR LOCATED IN OVERFLOW CONNECTION TO SHUT DOWN UNIT AND TXV.
3. FURNISH AND INSTALL TEMPERATURE CONTROLLER AND ALL CONTROL WIRING OF FAN COIL UNIT AND CONDENSING UNIT. CONTROLLER SHALL OPERATE ONLY ONE FCU AT A TIME.
4. PROVIDE CARRIER OR APPROVED EQUAL.
5. PROVIDE SMOKE DETECTOR IN R/A DUCT. MECHANICAL CONTRACTOR PROVIDE AND INSTALL, ELECTRICAL CONTRACTOR TO PROVIDE CIRCUITRY. INTERFACE WITH EXISTING FIRE ALARM SYSTEM AS REQUIRED TO SHUT-DOWN UNIT.
6. PROVIDE WITH FCU MANUFACTURER R/A GRILLE DIRECTLY ON FRONT OF UNIT.

AIR COOLED CONDENSER UNIT SCHEDULE

MARK	SERVES	NOMINAL SIZE (TONS)	CONDENSER UNIT DATA			ELECTRICAL CHARACTERISTICS					EER	MANUFACTURER MODEL NUMBER	NOTES
			REFRIG TYPE	COOLING DATA TMBH	AMBIENT TEMP. (°F)	VOLTS	PHASE	HZ	MCA	MOCP			
CU-1	FCU-1	7.5	R410A	85.2	105	208	3	60	33	50	11.2	CARRIER 38AUZE08A0M5	1, 2, 3, 4
CU-2	FCU-2	7.5	R410A	85.2	105	208	3	60	33	50	11.2	CARRIER 38AUZE08A0M5	1, 2, 3, 4

1. SIZE, ROUTE, INSULATE AND PROVIDE REQUIRED APPURTENANCES FOR DX PIPING SYSTEMS IN ACCORDANCE WITH THE MANUFACTURERS RECOMMENDATIONS AND TO MINIMIZE ANY CAPACITY LOSSES. PROVIDE AND INSTALL ALL REQUIRED REFRIGERANT PIPING ACCESSORIES. PIPING SHALL BE TYPE ACR COPPER PIPE.
2. UNIT SHALL BE SET ON 4" CONCRETE PAD.
3. PROVIDE WITH LOW-AMBIENT CONTROLS, HAIL GUARDS, SINGLE CIRCUIT / DUAL STAGE.
4. UNIT SHALL BE INSTALLED WITH CLEARANCES AS REQUIRED PER INSTALLATION INSTRUCTIONS AND ACTUAL FIELD CONDITIONS.

CELERIS GROUP

Celeris Group Consulting Engineers
2000 E. Lamar Blvd., Suite 550
Arlington, TX 76006
Phone: 817-446-1700
Fax: 817-460-0677
www.celerisgroup.com

Engineer:
Celeris Group Consulting Engineers
2000 E. Lamar Blvd., Suite 550
Arlington, TX 76006
Phone: 817-446-1700
Fax: 817-460-0677
Registration No: F-13992

Electrical Engineer:
Torres Engineering Services, Inc.
8237 Delafield Dr.
Ft. Worth, TX 76131
Phone: 682-556-0848
Registration No: F-10147

STAMP:

No.	Description	Date
0	ISSUED FOR CONSTRUCTION	01/31/18

AMERICAN TOWER CORPORATION

ATC SITE # 89137

DENTON BROADCAST

MECHANICAL DETAILS

Project number	17-10610
Date	01/31/18
Drawn by	KDR
Checked by	ZG

M02

Scale