Mode change over timing

Vehicle speed **< 18.75 mph**

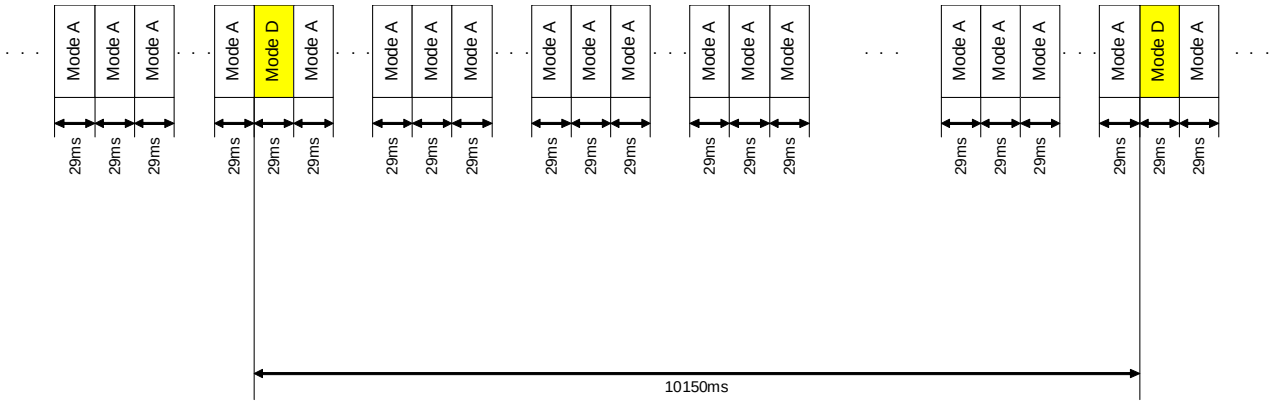
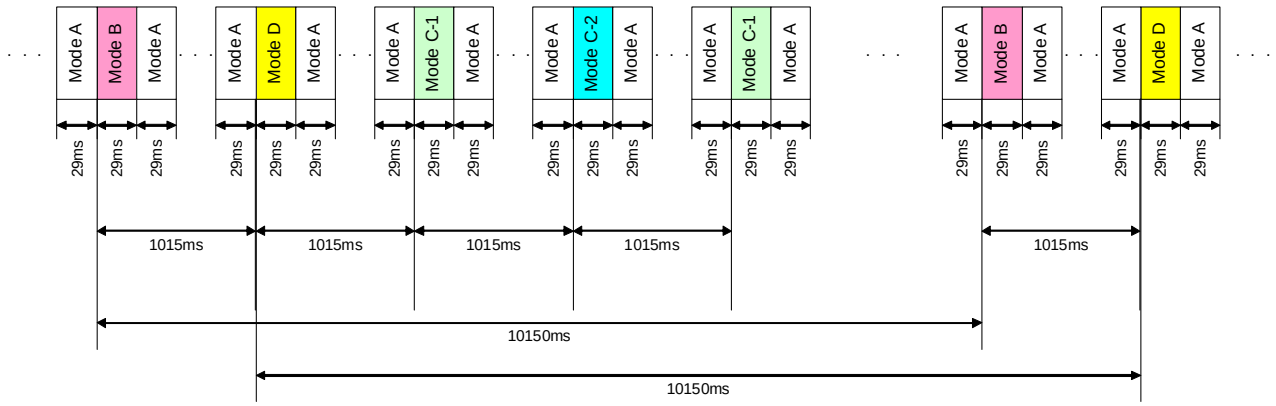
Vehicle speed >= **18.75 mph**