THE INFORMATION AND DESIGN DISCLOSED HEREIN WAS ORIGINATED BY AND IS THE PROPERTY OF THE SENSOR SYSTEM INC. SENSOR RESERVES ALL PATENT, PROPRIETARY, DESIGN, MANUFACTURING, REPRODUCTION, USE AND SALES RIGHTS THERETO, AND TO ANY ARTICLE DISCLOSED THEREIN, EXCEPT TO THE EXTENT RIGHTS ARE EXPRESSLY GRANTED TO OTHERS. THE FOREGOING DOES NOT APPLY TO VENDOR PROPRIETARY PARTS.

REVISIONS

ZONE	LTR	DESCRIPTION	EFFECTIVITY	DATE	APPD
	D	REVISED & REDRAWN – TITLE BLOCK WAS ASSEMBLY DWG	ALL	R.D. 9-28-73	

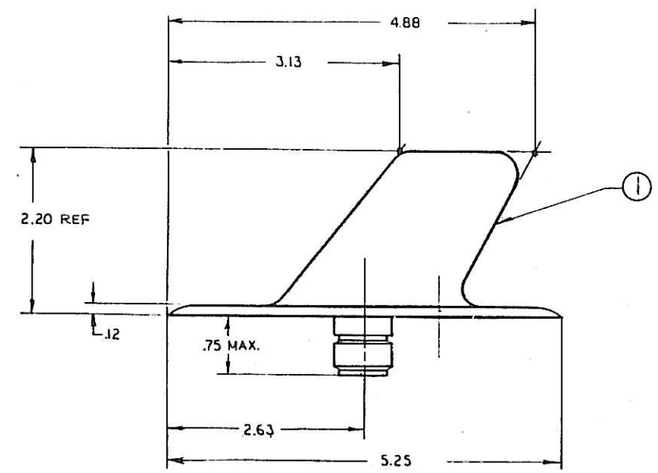

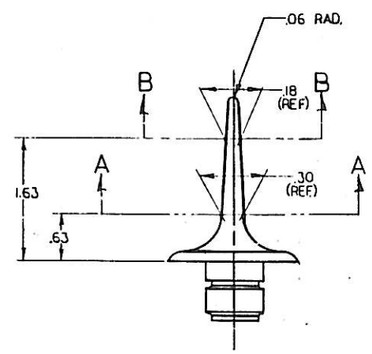

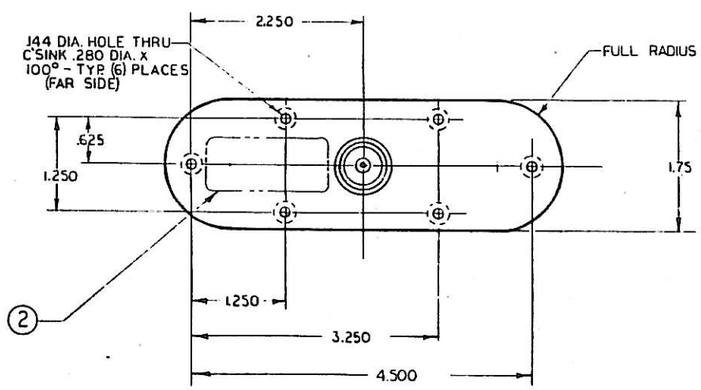

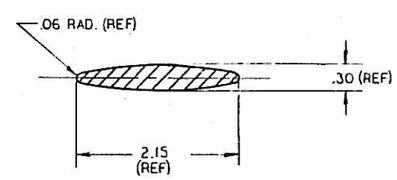

SECTION A-A

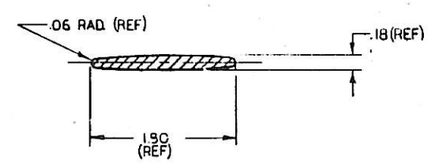

SECTION B-B

SPECIFICATIONS

ELECTRICAL:

FREQUENCY	.960 – 1.220 GHZ
VSWR	≤1.42:1 1.00-1.10 GHZ
	≤1.70:1 .96-1.20 GHZ
RADIATION PATTERNS	OMNIDIRECTIONAL IN AZIMUTH
	COSINUSOIDAL IN ELEVATION
POLARIZATION	VERTICAL
IMPEDANCE	50 OHMS
POWER	2000 WATTS PEAK
	250 WATTS CONTINUOUS
CONNECTOR	TYPE - "HN"

MECHANICAL

WEIGHT	4.0 OZ. (MAX)
DIMENSIONS	HEIGHT – 2.20 INCHES
	LENGTH – 5.25 INCHES
	WIDTH – 1.75 INCHES
MATERIAL	A-356 ALUMINUM CASTING
FINISH	EPOXY ENAMEL - ORANGE OR WHITE (OPTIONAL)

ENVIRONMENTAL

TEMPERATURE	-100° F TO +400° F
VIBRATION	±10 G's
ALTITUDE	0 FT. TO 70,000 FT.

FEDERAL AND MILITARY

FAA TSO C-66A, C-74 AUTHORIZED
DESIGNED TO: MIL-E-5400H, MIL-E-5272C, MIL-A-7772B, MIL-A-25708A, MIL-A-25730B

LIST OF MATERIALS

REQD PER ASSY	CODE IDENT	PART OR IDENTIFYING NO.	NOMENCLATURE OR DESCRIPTION	SPECIFICATION	MATERIAL OR NOTE	UNIT WT	Z	ITEM NO.
1		S65-1092	NAMEPLATE		AS REQ'D			2
1		S65-5366-2L	ANTENNA ASSEMBLY					1

PART DASH NO.	NEXT ASSY	USED ON	NEXT ASSY	FINAL ASSY
	B.	C-135/KC135		
	L-G	C130/141		
	REF:	AT-741		

APPLICATION — QTY REQD

UNLESS OTHERWISE SPECIFIED
ANGULAR TOLERANCE ±
LINEAR – HUNDREDTHS ± .030
THOUSANDTHS ± .010

ON SHEET METAL PARTS: ALL BEND RELIEF & INSIDE CORNER RADII .16. OUTSIDE CORNERS .22 RADIUS OPTIONAL. THESE ARE MINIMUM ROUTER REQUIREMENTS. ALL BEND RADII _____

✓ INDICATES SURFACE ROUGHNESS PER MIL-STD-10

FABRICATE PER MANUAL OF STANDARD SHOP PRACTICES No. _____

DRAFTSMAN	P. CRAVITS	1-29-67
DESIGN APPROVAL		
CHECK	P. CRAVITS	1-29-67
WEIGHT		
STRESS	H. HUTCHESON	1-29-67
PROJECT OFFICE	C.L. FULLER	1-29-67
APPROVAL		1-29-67

Sensor Systems inc. Chatsworth, California 91311

TITLE: OUTLINE DRAWING L. BAND ANTENNA

CODE IDENT NO.	SIZE	NO.	
13691	D	S65-5366-2L	D

SCALE FULL | WEIGHT — | SHEET 1 OF 1

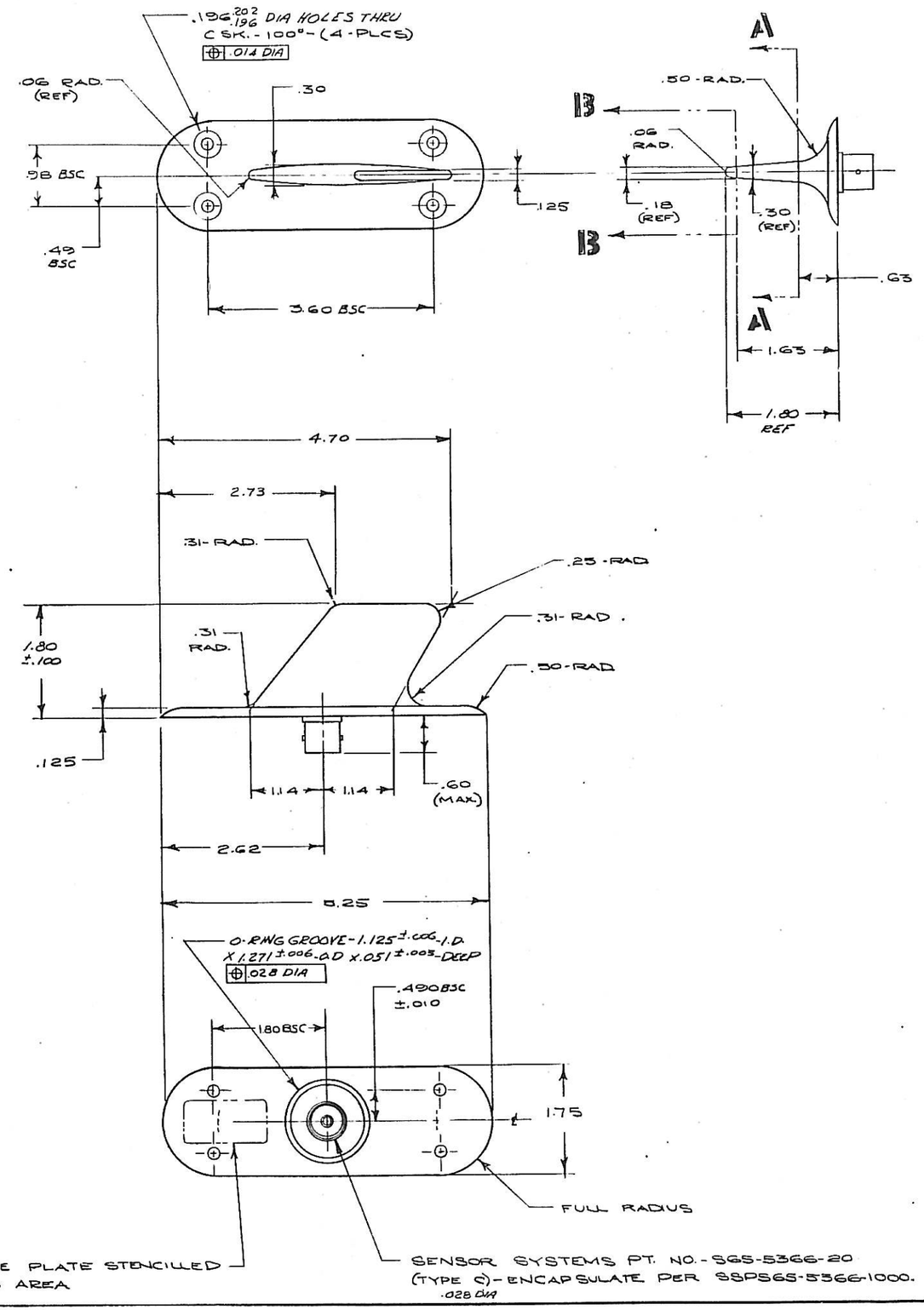

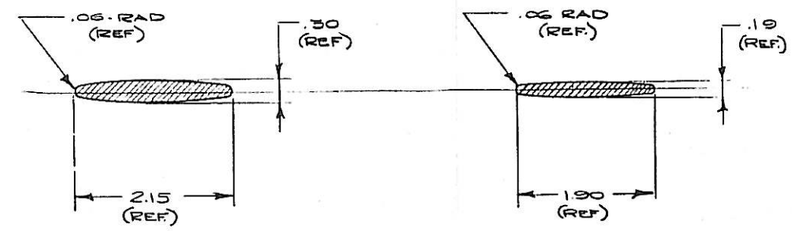

SECTION - A - A

SECTION - B B

8 - OPTIONAL MOUNTING HOLE PATTERNS AND CONNECTOR TYPES ARE AVAILABLE.

7 - HOLE POSITIONING TOLERANCES IN ACCORDANCE WITH MIL-STD-8C.

6 ELECTRICAL & MECHANICAL SPECIFICATIONS SENSOR SYSTEMS DOC 5300

5 - FREQUENCY RANGE SHALL BE 1435 MC TO 1535 MC - VSWR SHALL BE 1.5 TO 1 OR LESS.

4 - COAXIAL CABLE PER MIL-C-17C TYPE VII - (TEFLON JACKET) -

3 - CASTING DRAWING SGS-5366-10 - MACHINING DRAWING SGS-5366-11

2 - AFTER IRIDITE & ASS'Y., PAINT PER BMS-10-11G TYPE I DE SOTO #1910091 PRIMER & BMS-10-11F TYPE 8 ENAMEL COLOR 201 ORANGE

1 - MOUNTING SURFACE OF BASE PLATE & C SK. HOLES ARE NOT PAINTED

NOTES: UNLESS OTHERWISE SPECIFIED

THIS PRINT CONTAINS PROPRIETARY INFORMATION, AND SUCH INFORMATION MAY NOT BE DISCLOSED TO OTHERS FOR ANY PURPOSE NOR USED FOR MANUFACTURING PURPOSES WITHOUT WRITTEN CONSENT OF SENSOR SYSTEMS INC.

UNLESS OTHERWISE SPECIFIED DIMENSIONS ARE IN INCHES TOLERANCE ON FRACT ±1° DEC .XX - ± .030 .XXX ± .010	DGN		4/16/66	ASSEMBLY DRAWING L-BAND TELEMETRY ANTENNA	SENSOR SYSTEMS INC. 8929 FULLBRIGHT CHATSWORTH, CALIF
	CKD.		4/16/66		
	MECH DES.		4/16/66		
MAT'L ALUM ALLOY A356	MAT'L SPEC QQA-596 COMP-3	ELEC DES	4/16/66		
		PROJ ENG	6/16/66		
		FINAL APPROVAL	6/16/66		
HEAT TREAT T-61	FINISH IRIDITE PER MIL-C-5541 & NOTE 2.	NAME	DATE	SCALE FULL WT .18 LBS	DRAWING NO. SGS-5366-4L SHEET 1 OF 1

21

THE INFORMATION AND DESIGN DISCLOSED HEREIN WAS ORIGINATED BY AND IS THE PROPERTY OF THE SENSOR SYSTEMS INC. SENSOR RESERVES ALL PATENT, PROPRIETARY, DESIGN, MANUFACTURING, REPRODUCTION, USE AND SALES RIGHTS THERETO, AND TO ANY ARTICLE DISCLOSED THEREIN EXCEPT TO THE EXTENT RIGHTS ARE EXPRESSLY GRANTED TO OTHERS. THE FOREGOING DOES NOT APPLY TO VENDOR PROPRIETARY PARTS.

REVISIONS

ZONE	LTR	DESCRIPTION	EFFECTIVITY	DATE	APPD
	F	[illegible] OUTLINE DWG SHEET 2, ASSEMBLY DWG WAS SHEET 1, CONTINUE REV LTRS.	ALL	12-3-75 R.D.	[illegible] 12-3-75
	Q	DELETED ASSY DWG. REF. (SHEET 2)	ALL	4-8-76 R.D	[illegible] 4-12-76
B2,3	R	ADDED ANT. ASSY 565-936607	ALL ECO #250	9-11-78 C.H.	[illegible] 9-13-78
C2	S	ADDED ENAMEL COLOR AS OPT.	ALL ECO 241	9-15-78	[illegible] 9-19-78
D2	T	4000 WATTS WAS 2500 WATTS AZIMUTH MIN - TOTAL WAS TOTAL	ALL ECO 374	7-15-82	[illegible] 7-19-82
D2	U	ADDED GREY COLOR OPTION TO FINISH CALL OUT	ECO #1327	1-31-86	[illegible] 1-30-86

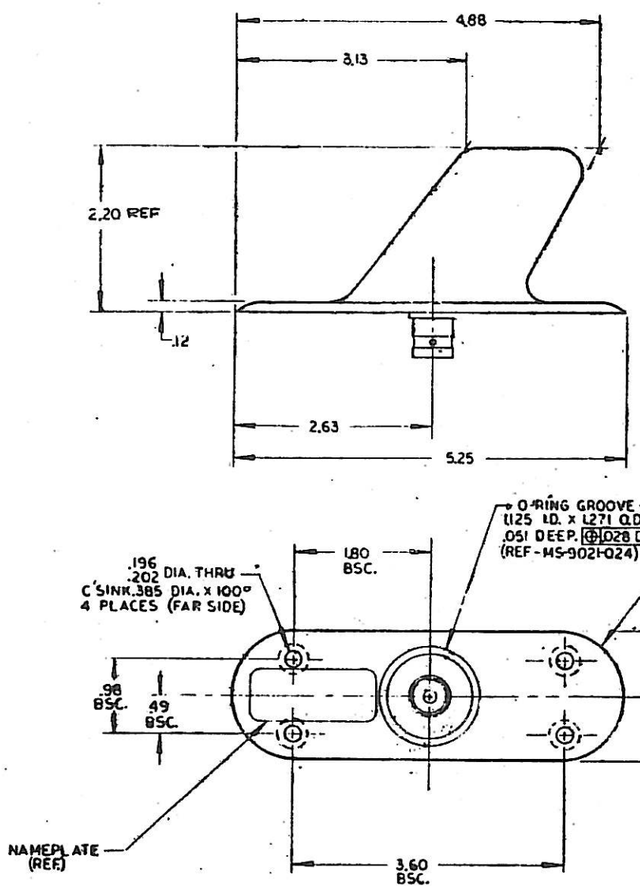

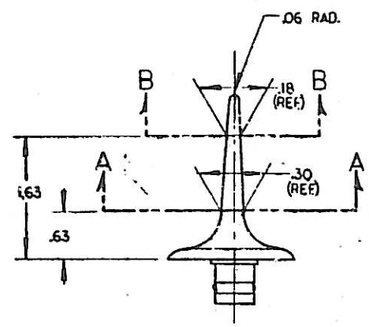

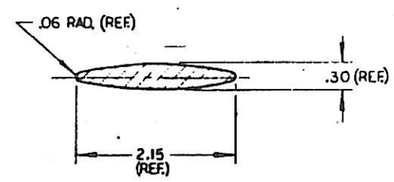

SECTION A-A

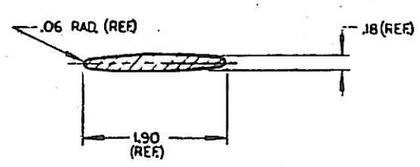

SECTION B-B

SPECIFICATIONS

ELECTRICAL

FREQUENCY	960 – 1220 MHZ.
VSWR	≤1.40:1 @ 1000 – 1100 MHZ., ≤1.70:1 @ 960 – 1220 MHZ.
RADIATION PATTERNS	OMNIDIRECTIONAL IN AZIMUTH, COSINUSOIDAL IN ELEVATION
POLARIZATION	VERTICAL
IMPEDANCE	50 OHMS
POWER	4000 WATTS PEAK, 250 WATTS CONTINUOUS
LIGHTNING PROTECTION	D.C. GROUNDED PER MIL-A-9094, B-5087

MECHANICAL

WEIGHT	4.0 OZ.
DIMENSIONS	HEIGHT – 2.20 INCHES LENGTH – 5.25 INCHES WIDTH – 1.75 INCHES
MATERIAL	A-356 ALUM. ALLOY CASTING
FINISH	SKYDROL RESISTANT EPOXY ENAMEL - COLOR: 201 ORANGE PER BAC-5376, FED-STD-595 GLOSS WHITE PER BAC 7067 OR LUSTERLESS GREY NO. 36320 (CUSTOMER OPTION)
NAMEPLATE	PER BAC-DG-5600 OR EQUIVALENT
CONNECTOR	TYPE 'C' FEMALE

ENVIRONMENTAL

TEMPERATURE	-100° F TO +400° F
ALTITUDE	UP TO 70,000 FT.
VIBRATION	±10 G"

FEDERAL AND MILITARY

FAA TSO C-66A, C-74 AUTHORIZED.

DESIGNED TO: MIL-E-5400H, MIL-E-5272C, MIL-A-7772B, MIL-A-25708A, MIL-A-25730B, MIL-STD-810B, MIL-STD-8C

LIST OF MATERIALS

REQD PER ASSY	-1	CODE IDENT	PART OR IDENTIFYING NO.	NOMENCLATURE OR DESCRIPTION	SPECIFICATION	MATERIAL OR NOTE	UNIT WT	Z	ITEM NO.
			S65-936607	ANTENNA ASSEMBLY					

PART DASH NO.	NEXT ASSY	USED ON	NEXT ASSY	FINAL ASSY
	1 DF			
	APPLICATION		QTY REQD	

UNLESS OTHERWISE SPECIFIED
ANGULAR TOLERANCE ± 1°
LINEAR – HUNDREDTHS ± .060
THOUSANDTHS ± .010

ON SHEET METAL PARTS: ALL BEND RELIEF & INSIDE CORNER RADII .16, OUTSIDE CORNERS .22 RADIUS OPTIONAL. THESE ARE MINIMUM ROUTER REQUIREMENTS. ALL BEND RADII _____

✓ INDICATES SURFACE ROUGHNESS PER MIL-STD-10

FABRICATE PER MANUAL OF STANDARD SHOP PRACTICES No. _____

DRAFTSMAN	F. CRAVITS	6-16-66
DESIGN APPROVAL	S. ROBIN	7-25-73
CHECK	R. DOWN	7-25-73
WEIGHT	C. FULLER	6-16-66
STRESS	H. HUTCHESON	6-16-66
PROJECT OFFICE	C.L. FULLER	6-16-66
APPROVAL	M.E. HAZAR	6-16-66

Sensor Systems Inc. Chatsworth, California 91311

TITLE: OUTLINE DRAWING L-BAND ANTENNA

CODE IDENT NO.	SIZE	NO.	REV
13691	D	S65-5366-7L	U

SCALE: FULL WEIGHT ——— SHEET 1 OF 1

REVISIONS			
SYM	DESCRIPTION	DATE	APPROVED

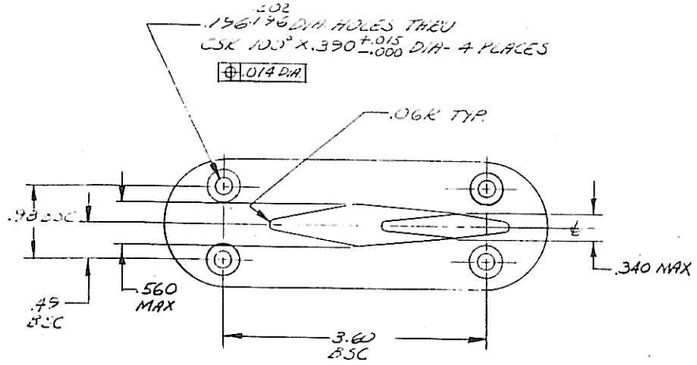

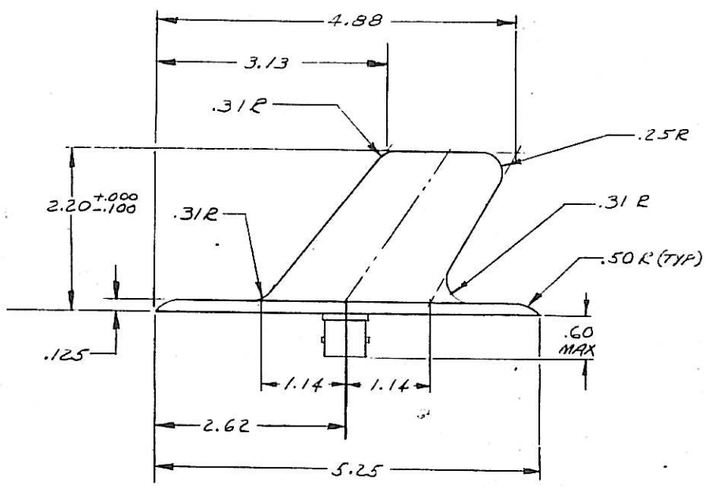

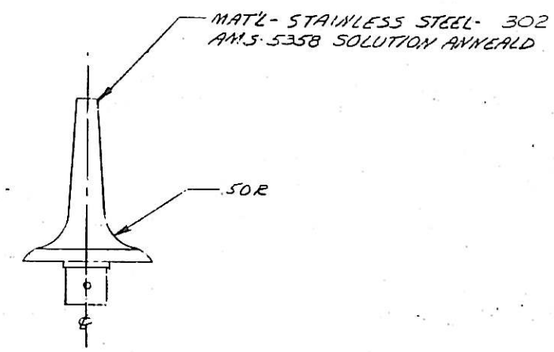

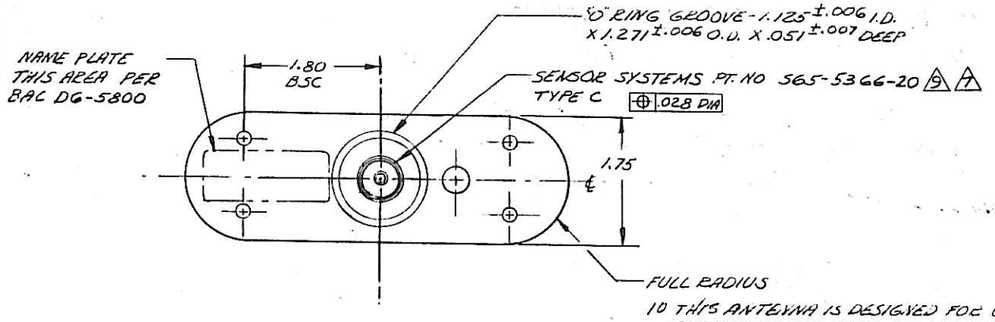

10 THIS ANTENNA IS DESIGNED FOR USE IN APPLICATIONS REQUIRING EXCEPTIONALLY HIGH RESISTANCE TO IMPACT FROM RUNWAY ROCKS, GRAVEL AND OTHER MATERIAL.

9. HOLE POSITIONING TOLERANCES IN ACCORDANCE WITH MIL-STD-8C

8. TSO C-66a AND C-74 AUTHORIZED

7. ENCAPSULATE PER SSPS 65-5366-1001

6. ELECTRICAL & MECHANICAL SPECIFICATIONS SENSOR SYSTEMS DOC-5300

5. FREQUENCY RANGE SHALL BE 960 MC TO 1220 MC. VSWR SHALL BE 1.7 TO 1 FROM 960 MC TO 1220 MC EXCEPT THAT BETWEEN 1000 MC TO 1100 MC THE VSWR SHALL BE 1.42 TO 1 - OR LESS.

4. COAXIAL CABLE PER MIL-C-17C TYPE III (TEFLON JACKET)

3. CASTING DRAWING-565-5366-80, MACHINING DRAWING-565-5366-11

2. PAINT PER BMS 10-11 TYPE I DE SOTO #191 0031 PRIMER & BMS 10-11 TYPE 2 ENAMEL COLOR 201-ORANGE

1. MOUNTING SURFACE OF BASE PLATE & CSK HOLES ARE NOT PAINTED

NOTES: UNLESS OTHERWISE SPECIFIED

PART DASH NO.	NEXT ASSY	USED ON	NEXT ASSY	FINAL ASSY
	APPLICATION		QTY REQD	

REQD PER ASSY	-1	CODE IDENT	PART OR IDENTIFYING NO.	NOMENCLATURE OR DESCRIPTION	SPECIFICATION	MATERIAL OR NOTE	UNIT WT	Z	ITEM NO.

LIST OF MATERIALS

UNLESS OTHERWISE SPECIFIED
ANGULAR TOLERANCE ±
LINEAR — HUNDREDTHS ± .030
THOUSANDTHS ± .010

ON SHEET METAL PARTS: ALL BEND RELIEF & INSIDE CORNER RADII .16. OUTSIDE CORNERS .22 RADIUS OPTIONAL. THESE ARE MINIMUM ROUTER REQUIREMENTS. ALL BEND RADII _____

✓ INDICATES SURFACE ROUGHNESS PER MIL-STD-10

FABRICATE PER MANUAL OF STANDARD SHOP PRACTICES No. _____

DRAFTSMAN	J. Gonzales	6/12/66
DESIGN APPROVAL	C. L. Fuller	6/12/66
CHECK		
WEIGHT		
STRESS		
PROJECT OFFICE		
APPROVAL	M. E. B.	6/13/66

SENSOR SYSTEMS INC.
CALDERA PARK, CALIFORNIA

TITLE
ASSEMBLY DRAWING-
L-BAND ANTENNA
(STAINLESS STEEL)

CODE IDENT NO.	SIZE	NO.
	D	565-5366-8L

SCALE FULL | WEIGHT 2.50 LBS | SHEET | OF

565-5366-8L

FORM 20-123 (REV. 13-6)