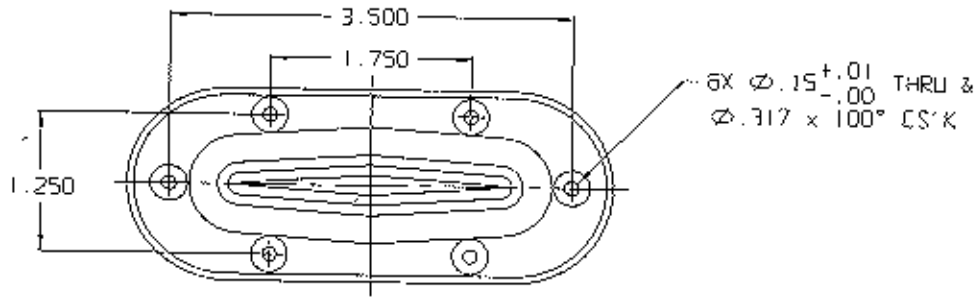

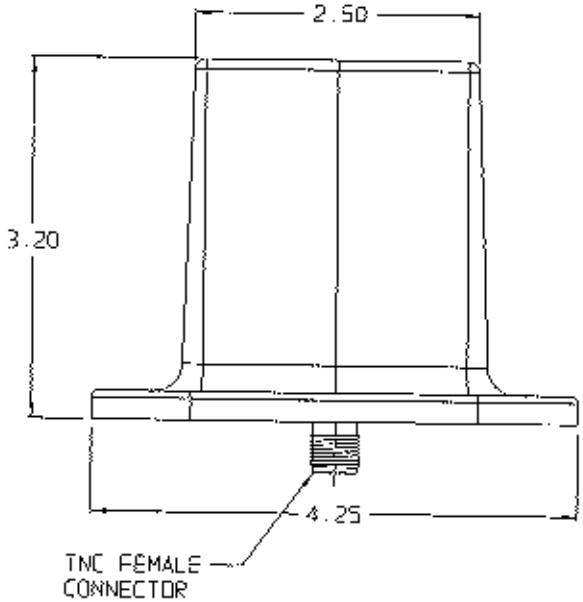

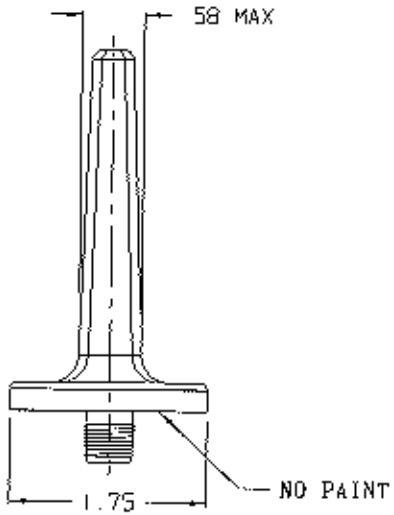

REVISIONS			
REV	DESCRIPTION	DATE	APPROVED

NOTES:

1. MARKING: MEC STD PLUS CUST P/N.
2. FINISH: B-274 BLACK POLYURETHANE RAIN EROSION PROTECTIVE COATING, AMS-C-83231 (MIL-C-83231A) TYPE II CLASS A. COMPOSITION L

FILENAME: X:\CAD\390\C423.PRT LEVEL 100

MATERIAL: -	CONTRACT NO.		MICROWAVE ENGINEERING CORPORATION NORTH ANDOVER, MASS. 01845-1012
	DWN BED	DATE 2006-04-06	m·e·c
FINISH: SEE NOTE 2	CHK DJM	2006-04-06	TITLE: ANTENNA, BLADE 700MHz-3.00GHz
	APPD H.C.	2006-04-06	
	LINEAR TOL .XX±.03 (INCHES) .XXX±.015 FRACTIONAL ± 1/64 ANGULAR TOL ± 1/2°		SIZE B · FSCM NO 06351 · DWG NO C390-423 · REV -
			SCALE 1/1.13 · WT. · SHEET 1 OF 1